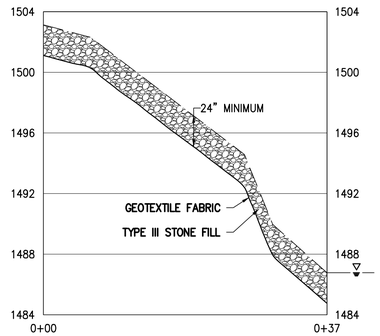

A / C6 RIVER BANK PROFILE

SCALE: HORIZ: 1"=10'
VERT: 1"=5'

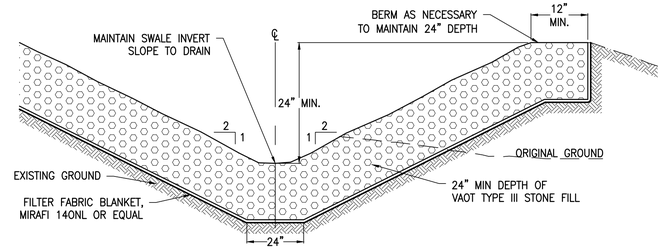

B / C6 TYPICAL STONE LINED STREAM BANK RESTORATION

SCALE: NONE

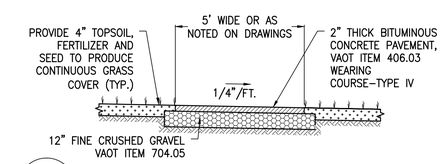

C / C6 TYPICAL BITUMINOUS SIDEWALK DETAIL

SCALE: NONE

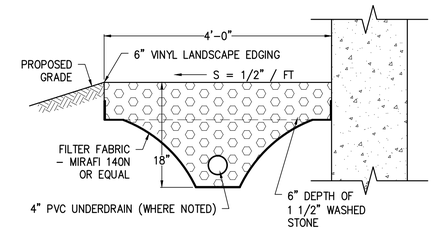

D / C6 STONE DRIP EDGE W/ UNDERDRAIN DETAIL

SCALE: NONE

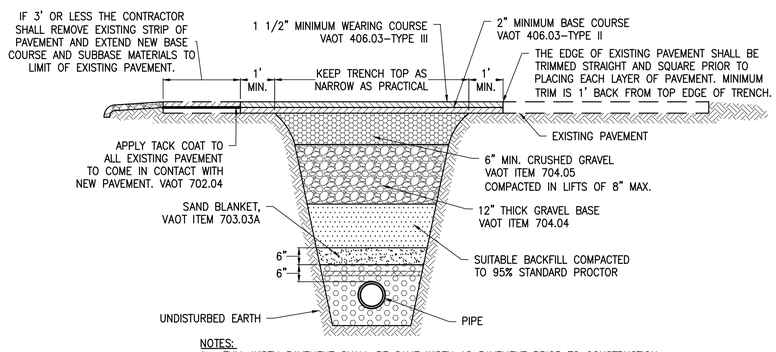

NOTES:

1. FULL WIDTH PAVEMENT SHALL BE SAME WIDTH AS PAVEMENT PRIOR TO CONSTRUCTION. CONTRACTOR SHALL BE RESPONSIBLE FOR DOCUMENTING EXISTING CONDITIONS PRIOR TO BEGINNING OF WORK ON THIS CONTRACT.
2. ALL PAVEMENT SHALL HAVE THE MINIMUM COMPACTED THICKNESS AS SHOWN.
3. ALL EXISTING PAVEMENT SHALL BE REPAINTED AS NECESSARY.

E / C6 TYPICAL TRENCH PAVEMENT REPAIR DETAIL

SCALE: NONE

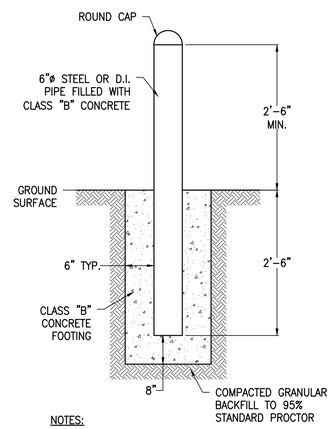

NOTES:

1. PAINT POST(S) AS PER SPECIFICATIONS WITH 1 PRIMER COAT AND 2 FINISH COAT–SAFETY YELLOW.

F / C6 TYPICAL BOLLARD DETAIL

SCALE: NONE

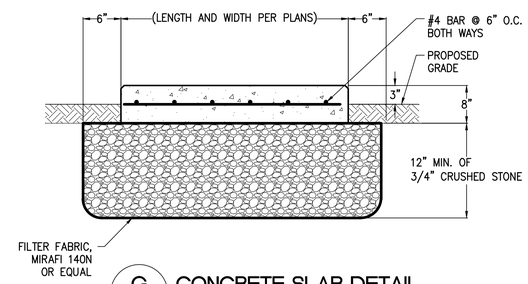

G / C6 CONCRETE SLAB DETAIL

SCALE: NONE

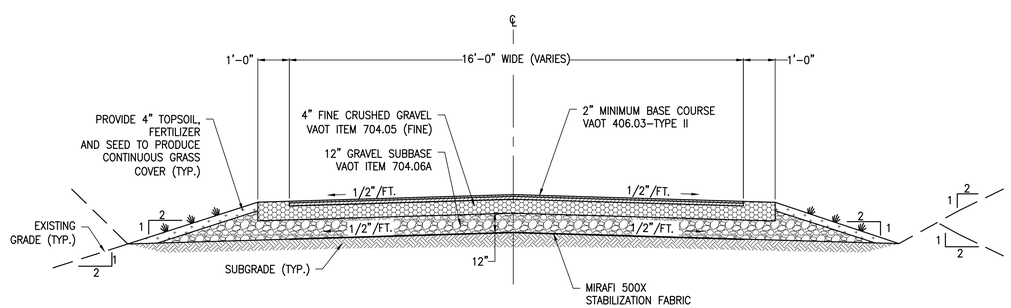

H / C6 TYPICAL BITUMINOUS ACCESS ROAD SECTION

SCALE: NONE

NOTES:

1. FINISH GRADES SHALL BE PER SPOT GRADES AND FINISH CONTOURS ON SITE PLAN.

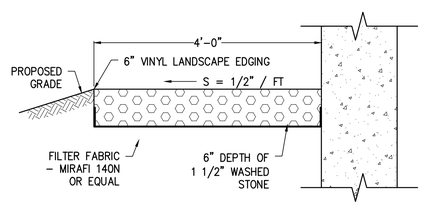

I / C6 STONE DRIP EDGE DETAIL

SCALE: NONE

Aldrich + Elliott
WATER RESOURCE ENGINEERS
6 Market Place, Suite 2
Essex Jct., VT 05452
P: 802.879.7733
AEengineers.com

No.	DATE	DESCRIPTION	CHECKED

TOWN OF WILMINGTON, VERMONT

WASTEWATER TREATMENT FACILITY REFURBISHMENT CONTRACT NO.1

SITE DETAILS

DESIGNED WAE	PROJECT NO. 14091
DRAWN PH	DRAWING C6
CHECKED WAE	
DATE MAY, 2015	

Y:\14091-WILMINGTON\14091-T1-T2-C1-C5-C6-C7-C8.dwg, 6/3/2015 9:14:51 AM, Patrick Hanley