TOWN OF WAITSFIELD
COUNTY OF WASHINGTON
STATE OF VERMONT

PROPOSED IMPROVEMENT
CULVERT PROJECT

TOWN OF WAITSFIELD
COUNTY OF WASHINGTON

ROUTE NO : JOSLIN HILL ROAD TH NO. 3 BRIDGE NO : BRIDGE NO. 23

PROJECT LOCATION: LOCATED ON JOSLIN HILL ROAD (TOWN HIGHWAY NO. 3). THE CULVERT IS LOCATED JUST WEST OF THE INTERSECTION OF BROOK ROAD (TOWN HIGHWAY NO. 26) AND JOSLIN HILL ROAD (TOWN HIGHWAY NO. 3).

PROJECT DESCRIPTION: WORK TO BE PERFORMED INCLUDES INSTALLATION OF A 6" CONCRETE LINING ALONG THE BOTTOM OF THE CULVERT, EXTENDING HEADWALLS, ROADWAY, SLOPE AND CHANNEL IMPROVEMENTS.

LENGTH OF STRUCTURE = 12.00 FEET (ALONG ROAD) 123.25 FEET (ALONG CHANNEL)
LENGTH OF ROADWAY = 100.00 FEET
LENGTH OF PROJECT = 100.00 FEET

INDEX OF SHEETS

1 TITLE SHEET
2 LEGEND SHEET
3 TYPICAL SECTIONS SHEET
4 GENERAL NOTES SHEET
5 QUANTITY SHEET
6 TIE SHEET
7 LAYOUT SHEET
8 PROFILE SHEET
9 STRUCTURE REPAIR SHEET
10 ROADWAY CROSS SECTIONS SHEET
11 CHANNEL CROSS SECTIONS SHEET

VTRANS STANDARDS

SD-501.00	CONCRETE DETAILS AND NOTES	2/9/2012
D-1	PRECAST REINFORCED CONCRETE DROP INLET DETAILS	6/1/1994
D-11	STEEL OR IRON GRATES AND COVERS (TYPE A)	6/1/1994
D-13	CONCRETE CATCH BASIN	1/3/2000
F-1	WOVEN WIRE FENCE DETAILS	6/1/1994
T-1	TRAFFIC CONTROL GENERAL NOTES	8/6/2012
T-10	CONVENTIONAL ROADS CONSTRUCTION APPROACH SIGNING	8/6/2012
T-28	CONSTRUCTION SIGN DETAILS	8/6/2012
T-30	CONSTRUCTION SIGN DETAILS	8/6/2012

APPROVAL
WATERSHED MANAGEMENT DIVISION
DATE 06/04/2015
BY
THIS APPROVAL IS SUBJECT TO THE TERMS AND CONDITIONS OF STREAM ALTERATION PERMIT # SA-06-24-2015 ISSUED HEREWITH

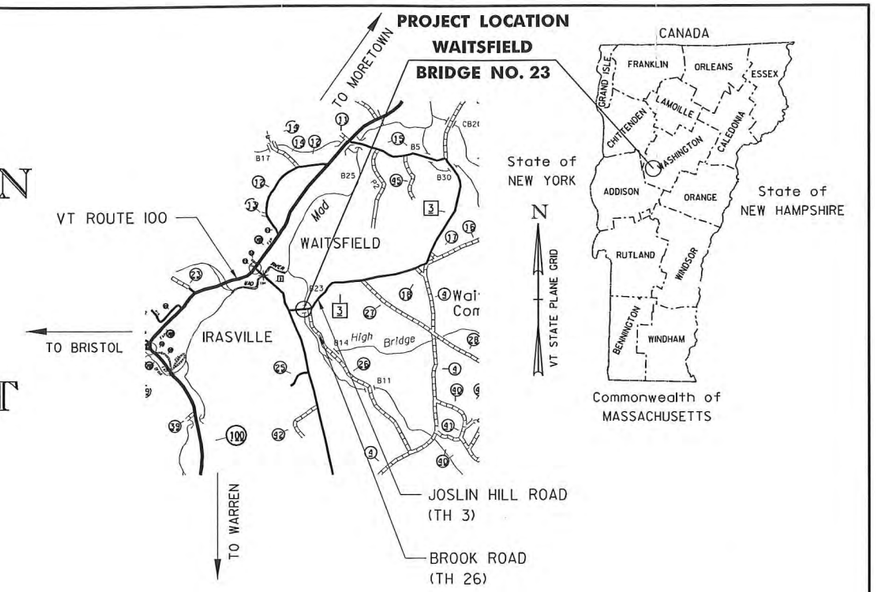

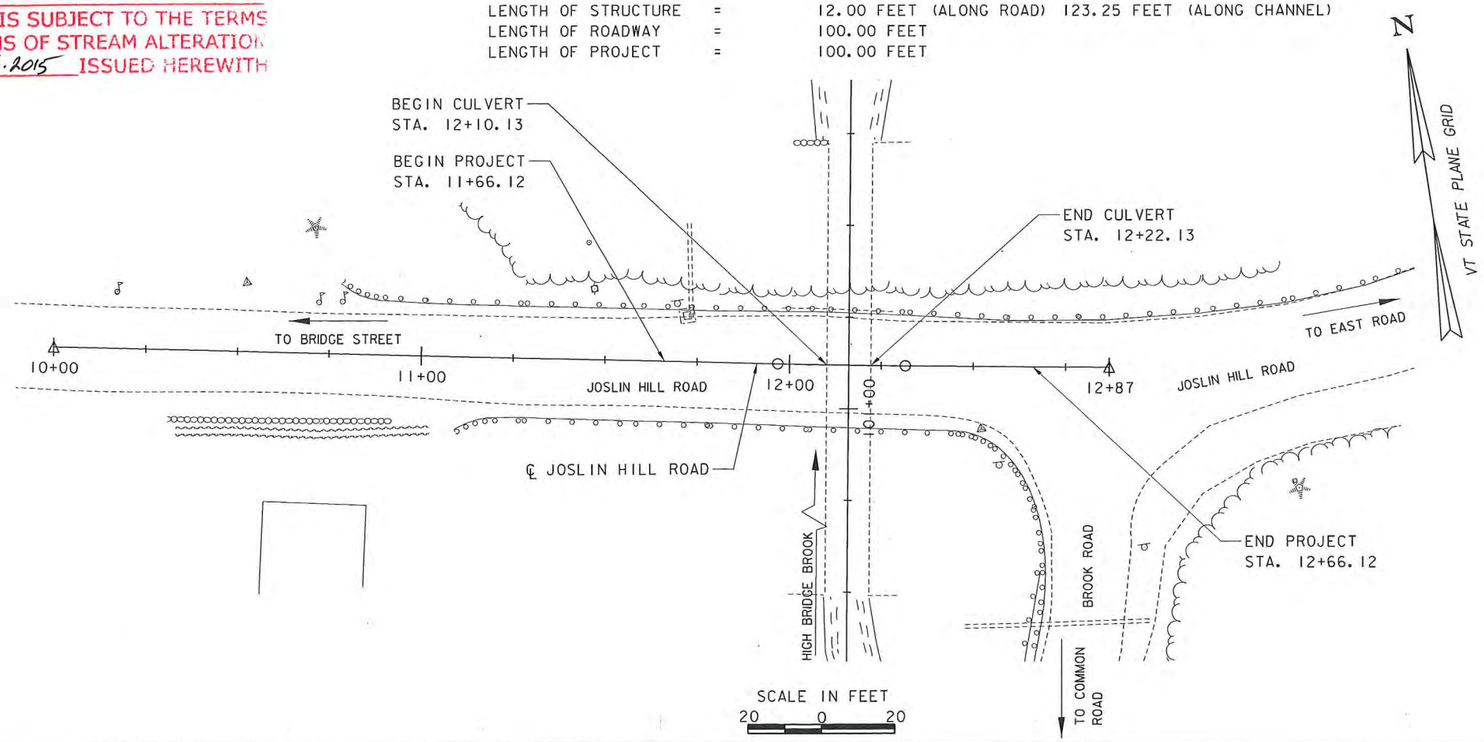

SURVEYED BY : DuBOIS & KING, INC.
SURVEYED DATE : OCT. 2014

DATUM (GPS DERIVED)
VERTICAL NAVD 88 (geoid12a)
HORIZONTAL NAD 83(2011) epoch 2010.0

PRE-FINAL PLANS
JANUARY, 2015
NOT FOR CONSTRUCTION

PROJECT MANAGER : EVAN P. DETRICK, P.E.
PROJECT NAME : WAITSFIELD BRIDGE NO. 23
PROJECT NUMBER : 621785P1

SHEET 1 OF 11 SHEETS

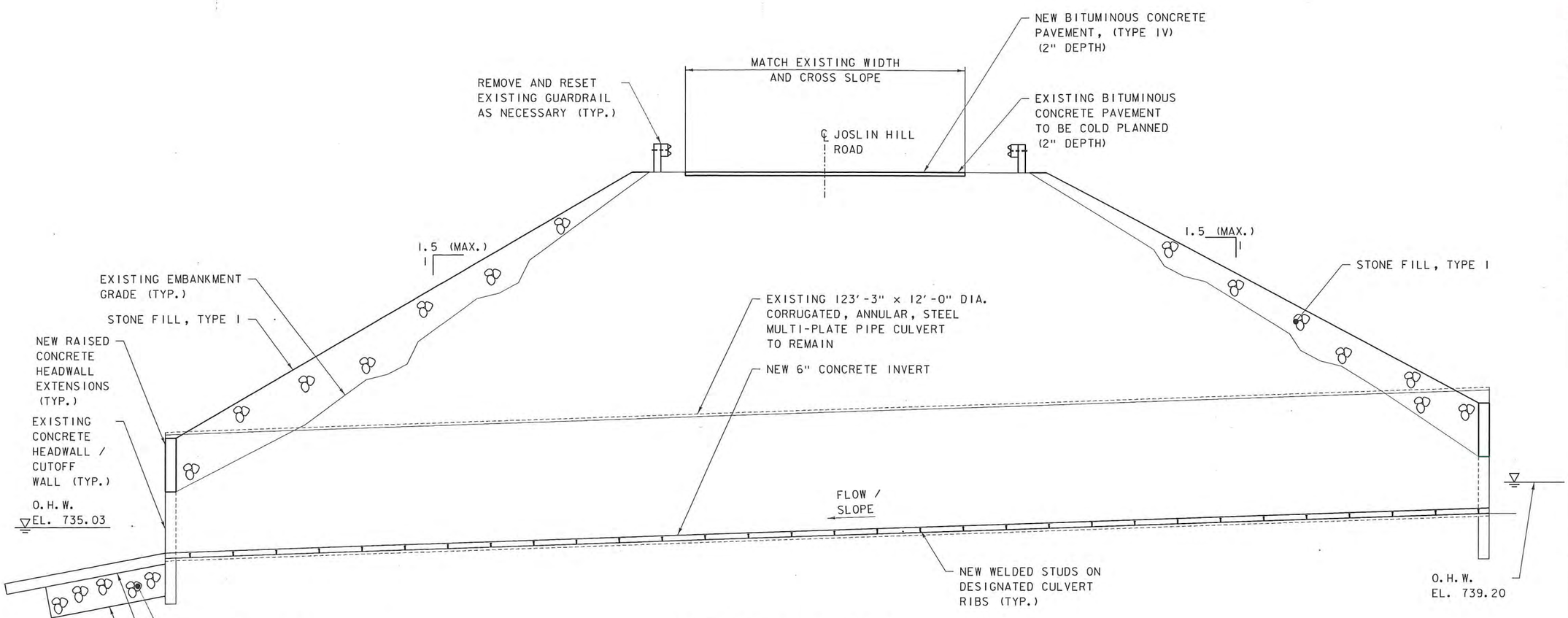

TYPICAL EMBANKMENT SECTION

PROPOSED CULVERT REPAIRS

SCALE IN FEET
5 0 5

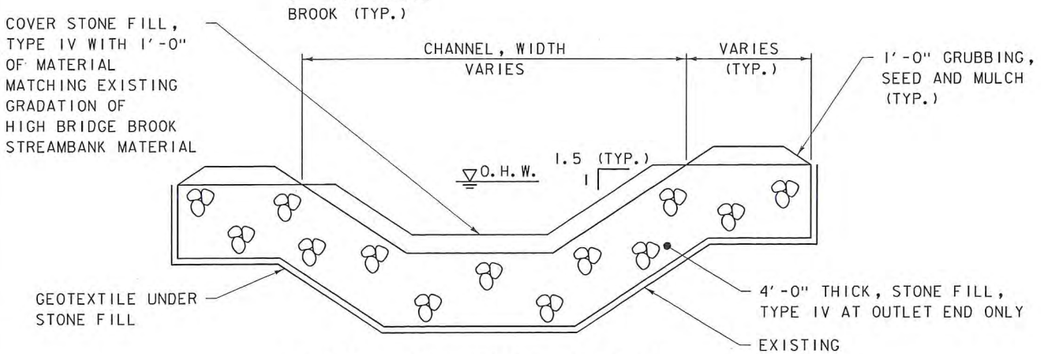

TYPICAL OUTLET CHANNEL SECTION

N.T.S.

APPROVAL
WATERSHED MANAGEMENT DIVISION
DATE 06/04/2015
BY
THIS APPROVAL IS SUBJECT TO THE TERMS AND CONDITIONS OF STREAM ALTERATION PERMIT# SA-06-24-2015 ISSUED HEREWITH

DuBois & King inc.
ENGINEERING • PLANNING • MANAGEMENT • DEVELOPMENT
6 GREEN TREE DRIVE
SOUTH BURLINGTON, VT 05403
TEL: (802) 878-7661
FAX: (866) 783-7101
www.dubois-king.com
RANDOLPH, VT
SPRINGFIELD, VT
BEDFORD, NH

© Copyright 2014 Dubois & King Inc.

PROFESSIONAL SEAL

NOT FOR CONSTRUCTION PRE-FINAL PLANS

NO.	DATE	DESCRIPTION	BY	CKD

TOWN OF WAITSFIELD, VERMONT

JOSLIN HILL ROAD BRIDGE NO. 23 REHABILITATION

SHEET TITLE

TYPICAL SECTIONS SHEET

DRAWN BY	DATE
PCB	DEC. 2014
CHECKED BY	D&K PROJECT #
EPD	621785P1
PROJ. ENG.	D&K ARCHIVE #
PCB	

SHEET NUMBER

3

SHEET 3 OF 11

\\archimedes\projects\621785 - Joslin Hill Culvert\DESIGN\CADD FILES\621785p1TYP.dgn

ALIGNMENT TIES

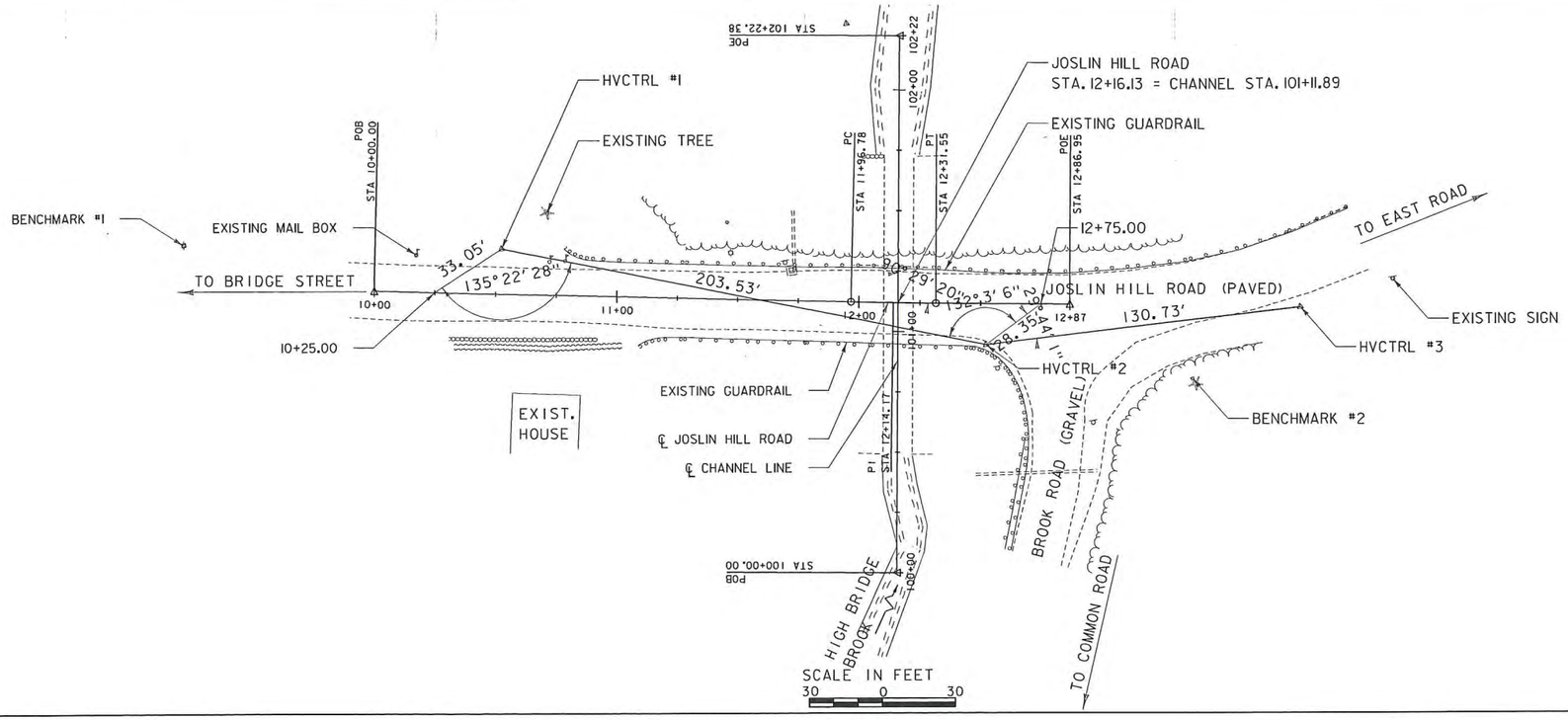

TRAVERSE TIES

HVCTRL #1

NORTH = 614574.30	
EAST = 1557505.76	
ELEV. = 767.62	

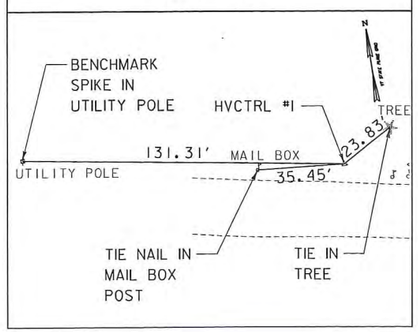

HVCTRL #2

NORTH = 614504.08	
EAST = 1557696.79	
ELEV. = 769.86	

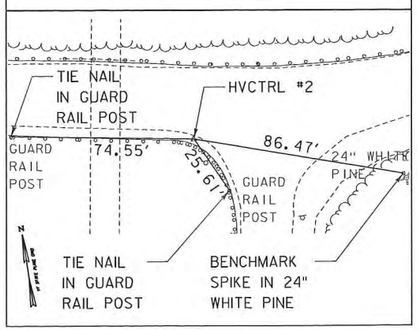

HVCTRL #3

NORTH = 614499.60	
EAST = 1557827.45	
ELEV. = 779.18	

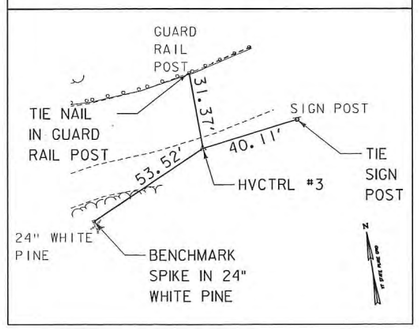

DATUM (GPS DERIVED)

VERTICAL NAVD 88 (geoid12a)

HORIZONTAL NAD 83(2011) epoch 2010.0

APPROVAL
WATERSHED MANAGEMENT DIVISION
DATE 06/04/2015
BY
THIS APPROVAL IS SUBJECT TO THE TERMS AND CONDITIONS OF STREAM ALTERATION PERMIT# SA-06-24-2015 ISSUED HEREWITH

DuBois & King inc.
ENGINEERING • PLANNING • MANAGEMENT • DEVELOPMENT
6 GREEN TREE DRIVE
SOUTH BURLINGTON, VT 05403
TEL: (802) 878-7661
FAX: (866) 783-7101
www.dubois-king.com
RANDOLPH, VT
SPRINGFIELD, VT
BEDFORD, NH

© Copyright 2014 Dubois & King Inc.

PROFESSIONAL SEAL

NOT FOR CONSTRUCTION PRE-FINAL PLANS

NO.	DATE	DESCRIPTION	BY	CKD

TOWN OF WAITSFIELD, VERMONT

JOSLIN HILL ROAD BRIDGE NO. 23 REHABILITATION

SHEET TITLE

TIE SHEET

DRAWN BY	DATE
PCB	DEC. 2014
CHECKED BY	D&K PROJECT #
EPD	621785P1
PROJ. ENG.	D&K ARCHIVE #
PCB	

SHEET NUMBER

6

SHEET 6 OF 11

\\archimedes\projects\621785 - Joslin Hill Culvert\DESIGN\CADD FILES\621785p1.dgn

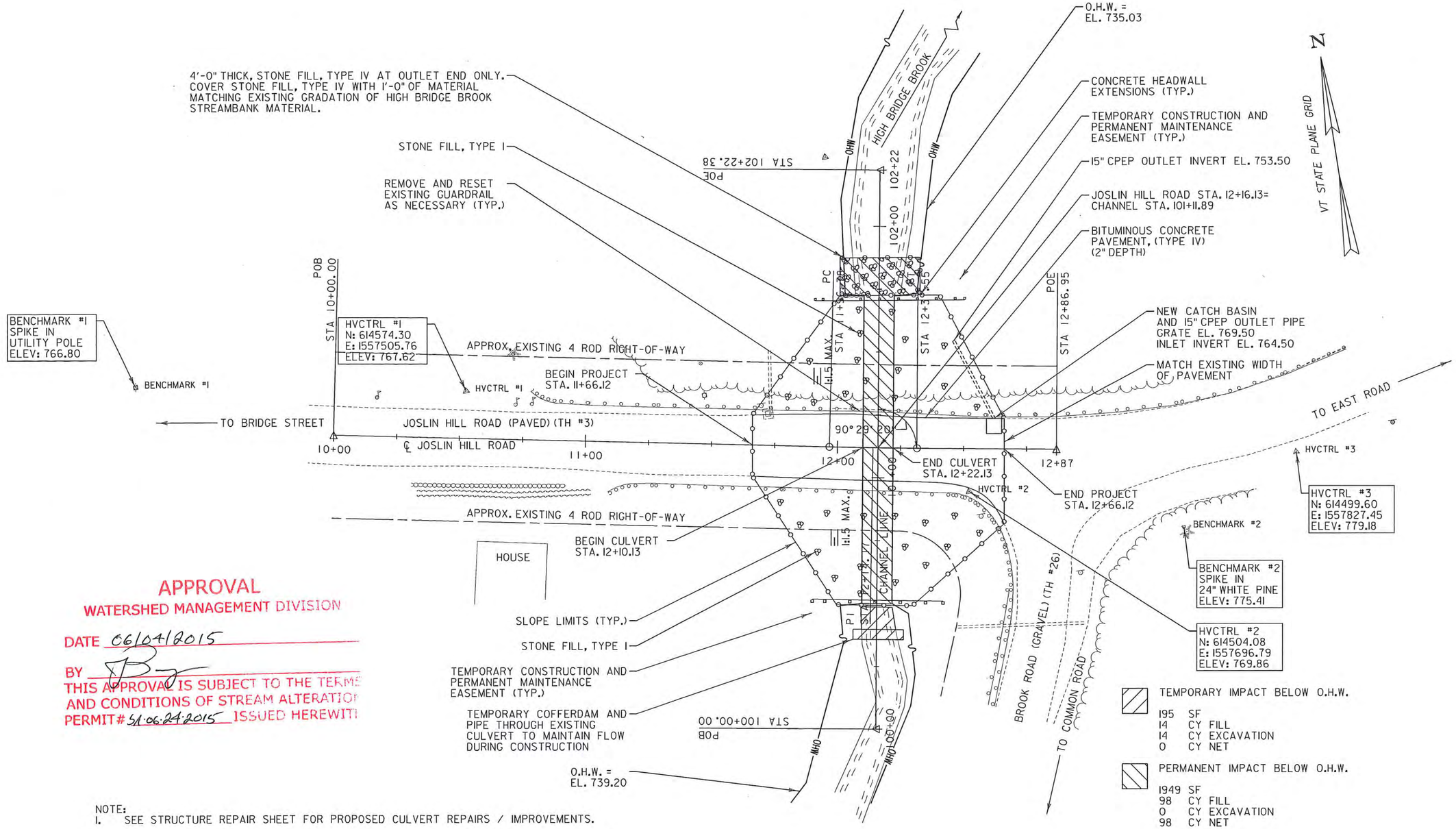

APPROVAL
WATERSHED MANAGEMENT DIVISION
DATE 06/04/2015
BY
THIS APPROVAL IS SUBJECT TO THE TERMS AND CONDITIONS OF STREAM ALTERATION PERMIT # 5-1-06-24-2015 ISSUED HEREWITH

NOTE:
1. SEE STRUCTURE REPAIR SHEET FOR PROPOSED CULVERT REPAIRS / IMPROVEMENTS.
2. THE STATED ANGLE BETWEEN THE ROADWAY CENTERLINE AND THE CHANNEL CENTERLINE IS DRAWN BETWEEN THE CHANNEL CENTERLINE AND A CHORD DRAWN BETWEEN THE ROADWAY CENTERLINE PC AND PT.

PLAN
SCALE IN FEET
20 0 20

DuBois & King inc.
ENGINEERING • PLANNING • MANAGEMENT • DEVELOPMENT
6 GREEN TREE DRIVE
SOUTH BURLINGTON, VT 05403
TEL: (802) 878-7661
FAX: (866) 783-7101
www.dubois-king.com
RANDOLPH, VT
SPRINGFIELD, VT
BEDFORD, NH

© Copyright 2014 Dubois & King Inc.

PROFESSIONAL SEAL

NOT FOR CONSTRUCTION PRE-FINAL PLANS

NO.	DATE	DESCRIPTION	BY	CK'D

TOWN OF WAITSFIELD, VERMONT

JOSLIN HILL ROAD BRIDGE NO. 23 REHABILITATION

SHEET TITLE
LAYOUT SHEET

DRAWN BY	DATE
PCB	DEC. 2014
CHECKED BY	D&K PROJECT #
EPD	621785P1
PROJ. ENG.	D&K ARCHIVE #
PCB	

SHEET NUMBER
7

\\archimedes\projects\621785 - Joslin HillCulvert\DESIGN\CADD FILES\621785plloyout.dgn

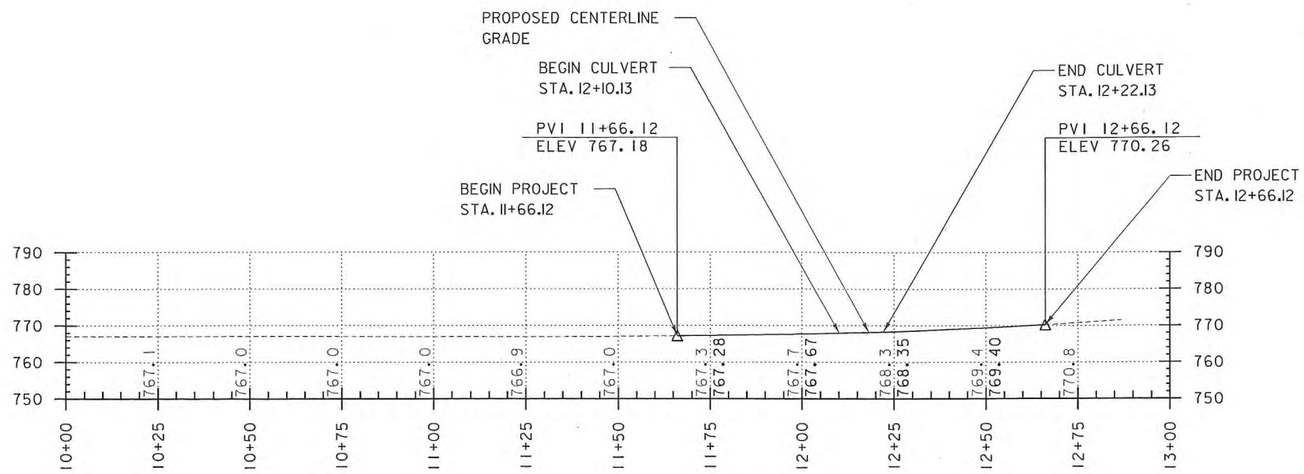

ROADWAY CENTERLINE PROFILE

SCALE: 1" = 20' HORIZONTAL
1" = 20' VERTICAL

APPROVAL
WATERSHED MANAGEMENT DIVISION

DATE 06/04/2015

BY

THIS APPROVAL IS SUBJECT TO THE TERMS AND CONDITIONS OF STREAM ALTERATION PERMIT # SA 06-24-2015 ISSUED HEREWITH

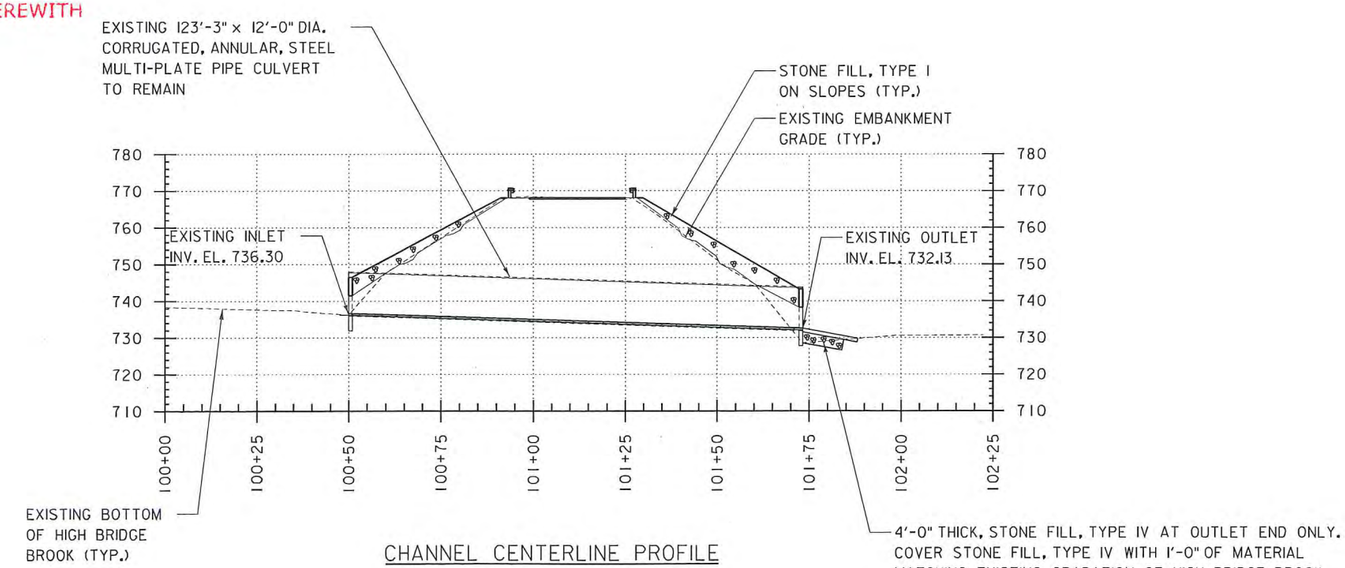

CHANNEL CENTERLINE PROFILE

SCALE: 1" = 20' HORIZONTAL
1" = 20' VERTICAL

DuBois & King inc.
ENGINEERING • PLANNING • MANAGEMENT • DEVELOPMENT
6 GREEN TREE DRIVE
SOUTH BURLINGTON, VT 05403
TEL: (802) 878-7661
FAX: (866) 783-7101
www.dubois-king.com
RANDOLPH, VT
SPRINGFIELD, VT
BEDFORD, NH
© Copyright 2014 Dubois & King Inc.

PROFESSIONAL SEAL

NOT FOR CONSTRUCTION PRE-FINAL PLANS

NO.	DATE	DESCRIPTION	BY	CK'D

TOWN OF WAITSFIELD, VERMONT

JOSLIN HILL ROAD BRIDGE NO. 23 REHABILITATION

SHEET TITLE

PROFILE SHEET

DRAWN BY	DATE
PCB	DEC. 2014
CHECKED BY	D&K PROJECT #
EPD	621785P1
PROJ. ENG.	D&K ARCHIVE #
PCB	

SHEET NUMBER

8

SHEET 8 OF 11

\\archimedes\projects\621785 - Joslin HillCulvert\DESIGN\CADD FILES\621785p1pro.dgn

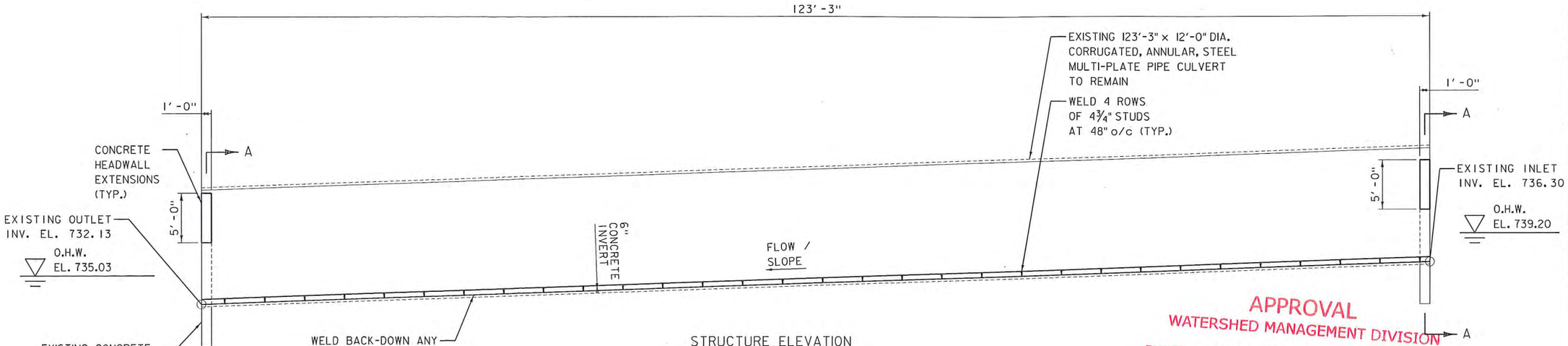

STRUCTURE ELEVATION
PROPOSED CULVERT REPAIRS
(FACING UPSTATION)
SCALE IN FEET
1 0 2 4 6 8

APPROVAL
WATERSHED MANAGEMENT DIVISION
DATE 06/04/2015
BY
THIS APPROVAL IS SUBJECT TO THE TERMS AND CONDITIONS OF STREAM ALTERATION PERMIT# SA-06-24-2015 ISSUED HEREWITH

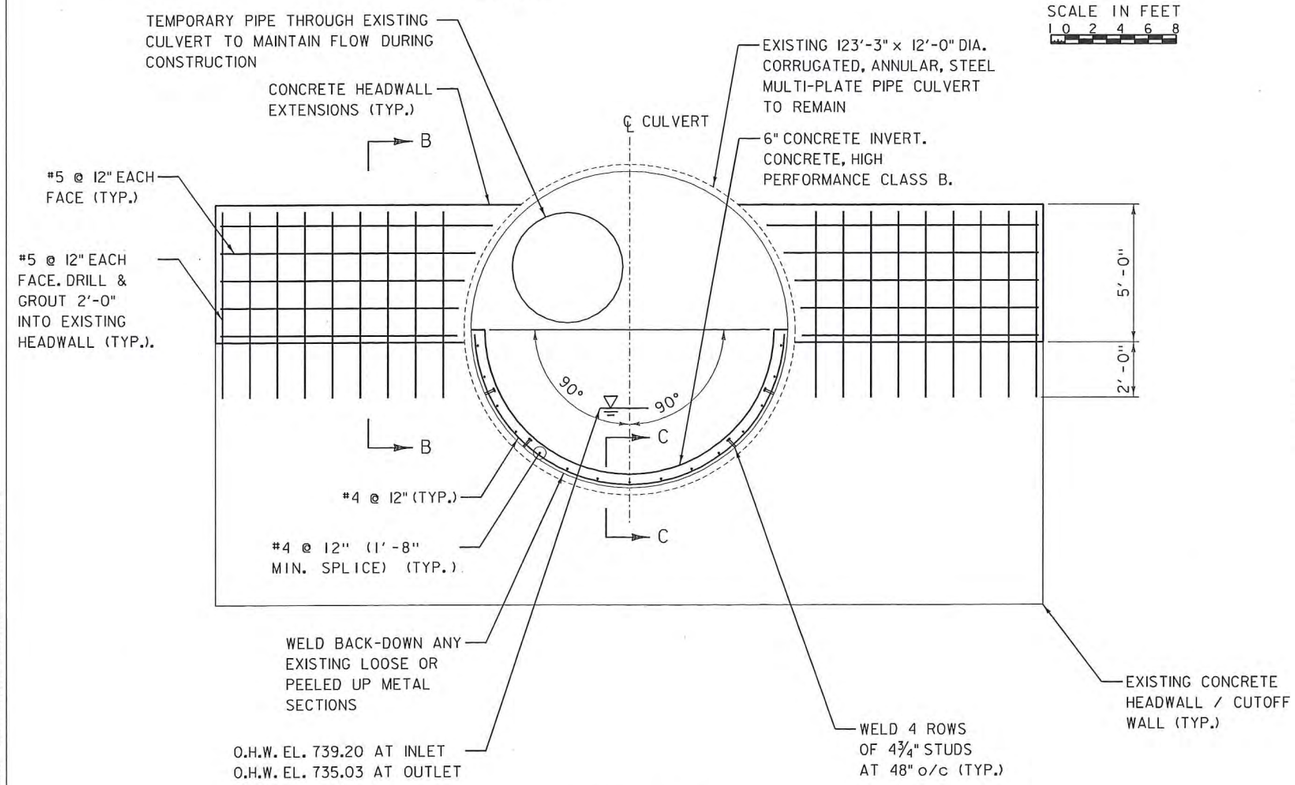

SECTION A - A
SCALE IN FEET
1 0 1 2 3 4

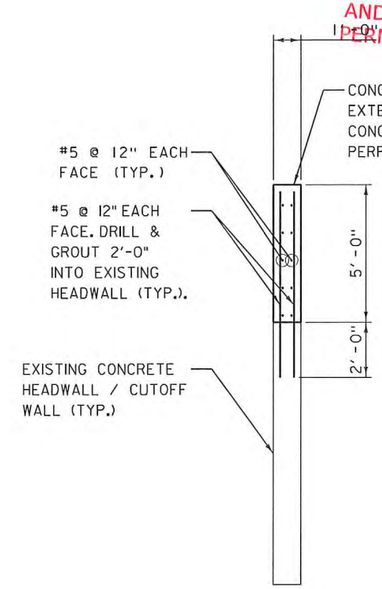

SECTION B - B
SCALE IN FEET
1 0 1 2 3 4

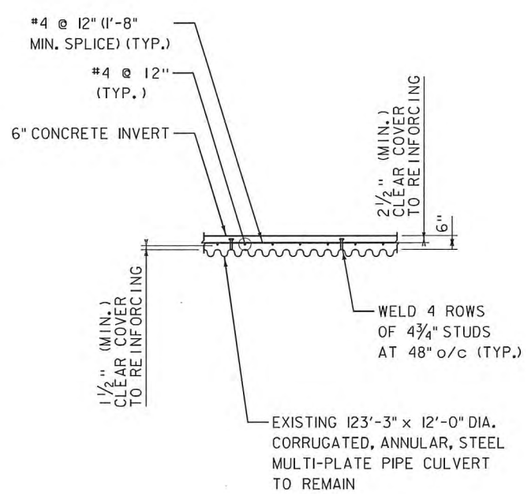

SECTION C - C
SCALE IN FEET
1 0 1 2 3 4

DuBois & King inc.
ENGINEERING • PLANNING • MANAGEMENT • DEVELOPMENT
6 GREEN TREE DRIVE
SOUTH BURLINGTON, VT 05403
TEL: (802) 878-7661
FAX: (866) 783-7101
www.dubois-king.com
RANDOLPH, VT
SPRINGFIELD, VT
BEDFORD, NH

© Copyright 2014 Dubois & King Inc.

PROFESSIONAL SEAL

NOT FOR CONSTRUCTION PRE-FINAL PLANS

NO.	DATE	DESCRIPTION	BY	CKD

TOWN OF WAITSFIELD, VERMONT

JOSLIN HILL ROAD BRIDGE NO. 23 REHABILITATION

SHEET TITLE
STRUCTURE REPAIR SHEET

DRAWN BY	DATE
PCB	DEC. 2014
CHECKED BY	D&K PROJECT #
EPD	621785P1
PROJ. ENG.	D&K ARCHIVE #
PCB	

SHEET NUMBER
9

\\archimedes\projects\621785 - Joslin HillCulvert\DESIGN\CADD FILES\621785p1sub.dgn

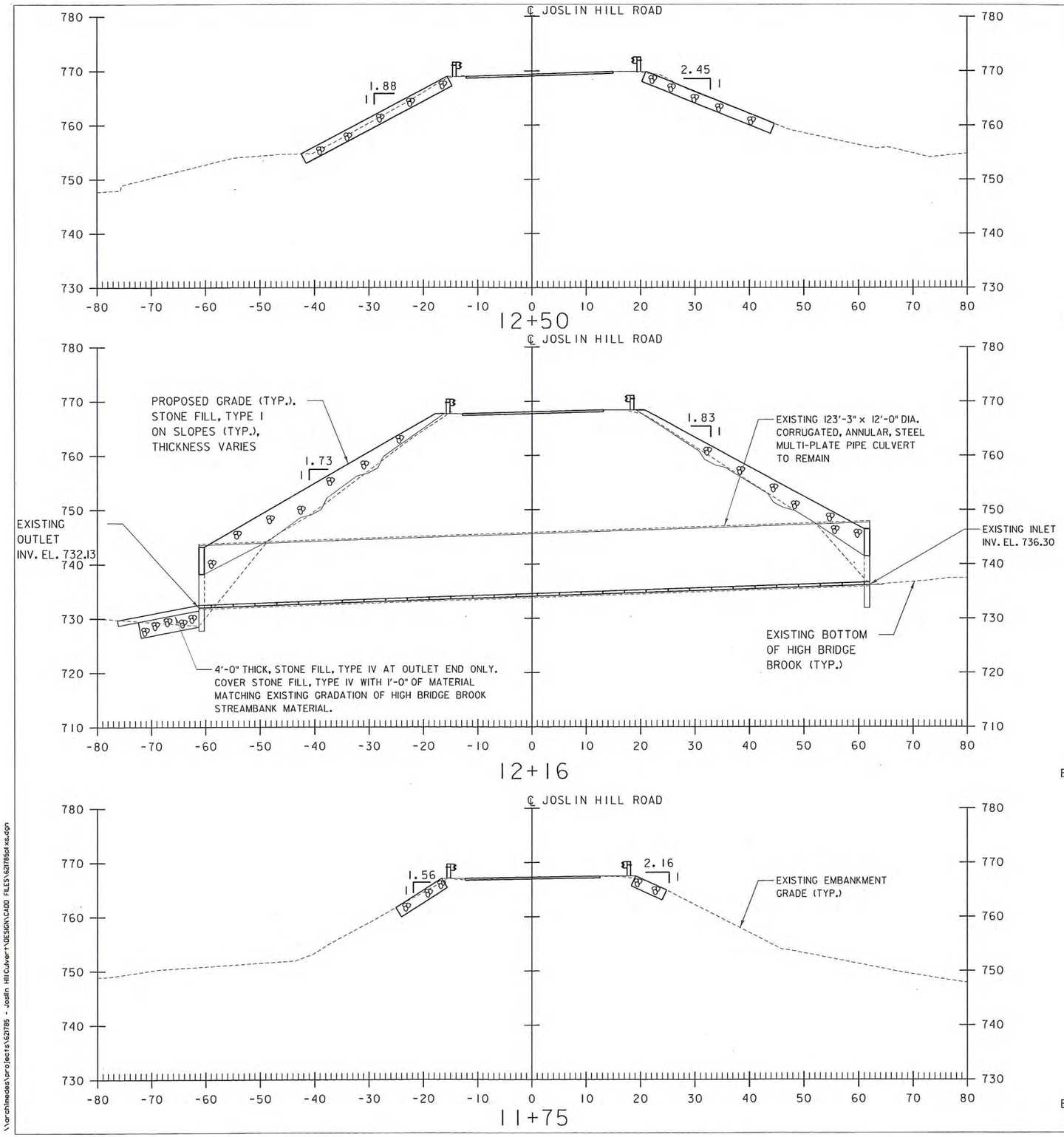

END PROJECT STA. 12+66.14

END CULVERT STA. 12+22.13

BEGIN CULVERT STA. 12+10.13

BEGIN PROJECT STA. 11+66.12

APPROVAL
WATERSHED MANAGEMENT DIVISION
DATE 06/04/2015
BY
THIS APPROVAL IS SUBJECT TO THE TERMS AND CONDITIONS OF STREAM ALTERATION PERMIT# SA-06-24-2015 ISSUED HEREWITH

SCALE 1" = 10'-0"
10 0 10

DuBois & King inc.
ENGINEERING • PLANNING • MANAGEMENT • DEVELOPMENT
6 GREEN TREE DRIVE
SOUTH BURLINGTON, VT 05403
TEL: (802) 878-7661
FAX: (866) 783-7101
www.dubois-king.com
RANDOLPH, VT
SPRINGFIELD, VT
BEDFORD, NH

© Copyright 2014 Dubois & King Inc.

PROFESSIONAL SEAL

NOT FOR CONSTRUCTION PRE-FINAL PLANS

NO.	DATE	DESCRIPTION	BY	CKD

TOWN OF WAITSFIELD, VERMONT

JOSLIN HILL ROAD BRIDGE NO. 23 REHABILITATION

SHEET TITLE

ROADWAY CROSS SECTIONS SHEET

DRAWN BY	DATE
PCB	DEC. 2014
CHECKED BY	D&K PROJECT #
EPD	621785P1
PROJ. ENG.	D&K ARCHIVE #
PCB	

SHEET NUMBER

10

SHEET 10 OF 11

\\archimedes\projects\62785 - Joslin Hill Culvert\DESIGN\CADD FILES\62785plxs.dgn

STA. 101+87.58
END STONE FILL, TYPE IV AND
GEOTEXTILE UNDER STONE FILL

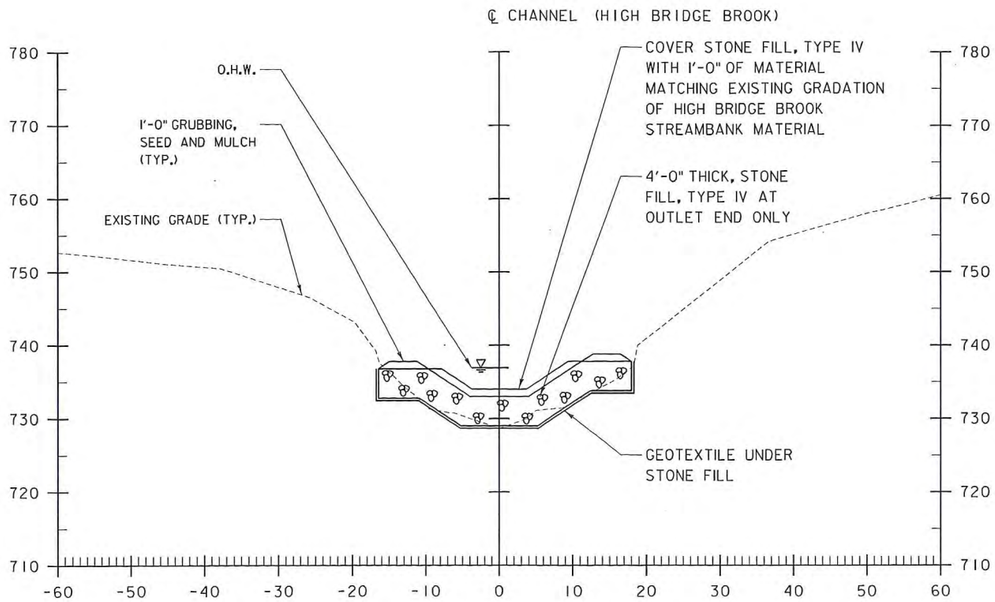

101+75

STA. 101+72.58
BEGIN STONE FILL, TYPE IV AND
GEOTEXTILE UNDER STONE FILL

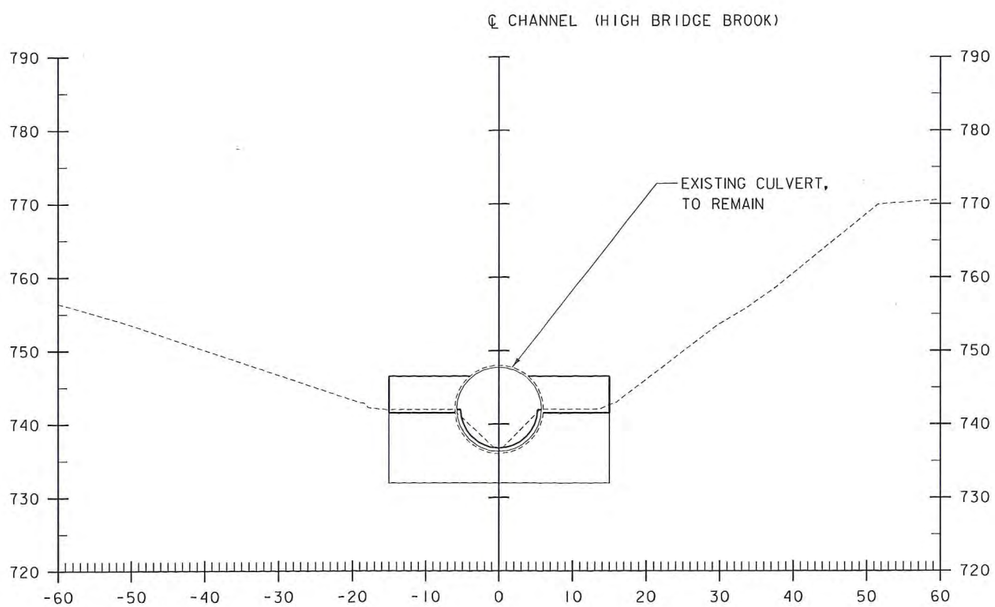

100+50

APPROVAL
WATERSHED MANAGEMENT DIVISION
DATE 06/04/2015
BY
THIS APPROVAL IS SUBJECT TO THE TERMS AND CONDITIONS OF STREAM ALTERATION PERMIT# SA-06-24-2015 ISSUED HEREWITH

SCALE 1" = 10'-0"
10 0 10

DuBois & King inc.
ENGINEERING • PLANNING • MANAGEMENT • DEVELOPMENT
6 GREEN TREE DRIVE
SOUTH BURLINGTON, VT 05403
TEL: (802) 878-7661
FAX: (866) 783-7101
www.dubois-king.com
RANDOLPH, VT
SPRINGFIELD, VT
BEDFORD, NH

© Copyright 2014 Dubois & King Inc.

PROFESSIONAL SEAL

NOT FOR CONSTRUCTION PRE-FINAL PLANS

NO.	DATE	DESCRIPTION	BY	CKD

TOWN OF WAITSFIELD, VERMONT

JOSLIN HILL ROAD BRIDGE NO. 23 REHABILITATION

SHEET TITLE

CHANNEL CROSS SECTIONS SHEET

DRAWN BY	DATE
PCB	DEC. 2014
CHECKED BY	D&K PROJECT #
EPD	621785P1
PROJ. ENG.	D&K ARCHIVE #
PCB	

SHEET NUMBER

11

SHEET 11 OF 11

\\archimedes\projects\621785 - Joslin Hill Culvert\DESIGN\CADD FILES\621785plchxs.dgn