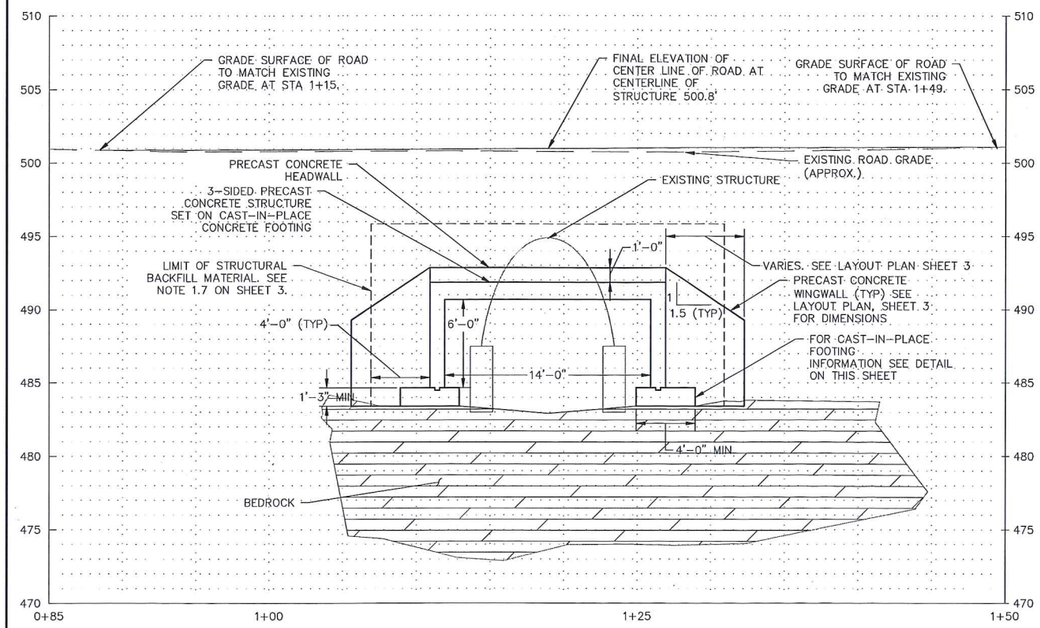

NORTH HOLLOW ROAD PROFILE

0' 5' 10' 15' 25'

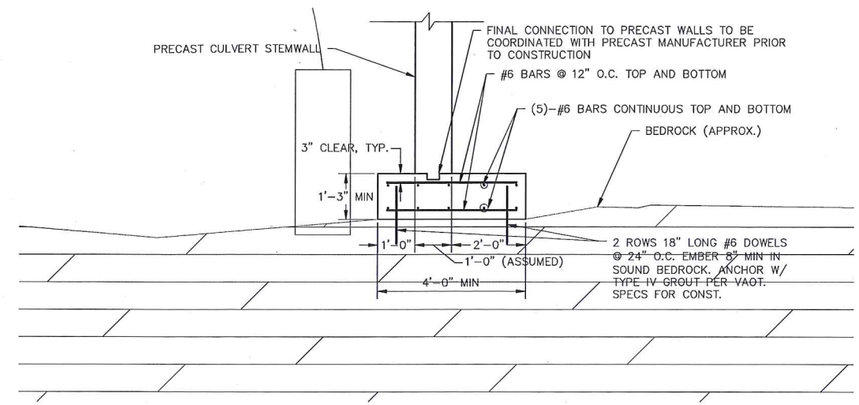

FOOTING DETAIL

0' 2' 3' 4' 6' 5'

APPROVAL
WATERSHED MANAGEMENT DIVISION
DATE 03/17/2015
BY
THIS APPROVAL IS SUBJECT TO THE TERMS AND CONDITIONS OF STREAM ALTERATION PERMIT# SA-6-05-2015 ISSUED HEREWITH

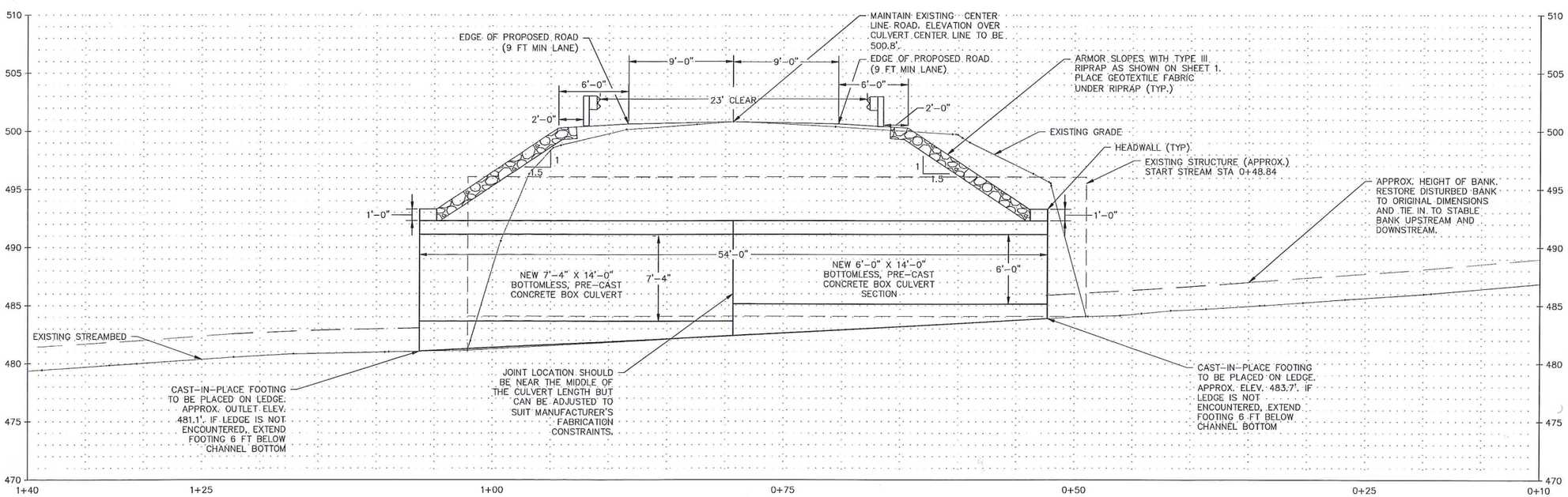

MARSH BROOK CHANNEL PROFILE

0' 5' 10' 15' 25'

T.R. FELLOWS NH VT ENGINEERING
CIVIL & STRUCTURAL
42 n. MAIN STREET
ROCHESTER, VT 05767
PH: 802.767.3631
FAX: 866.565.8131
trfellowsengineering.com
134 COUNTY ROAD
P.O. BOX 428 03908
BARRE, VT 05641
TEL/FAX: 802.479.4811
trfellowsengineering.com

NO.	DATE	REVISION

NORTH HOLLOW ROAD (TH 2)
CULVERT REPLACEMENT
MARSH BROOK, ROCHESTER, VERMONT
OWNER/CONTACT: TOWN OF ROCHESTER
67 SCHOOL ST.
ROCHESTER, VT 05767
802-767-3631

PROFILES AND DETAILS

STATE OF VERMONT
KENETH F. McCUSKER
NO. 5769
LICENSED
PROFESSIONAL ENGINEER

DRAWN BY: J. KROHN
CHECKED BY: K. McCUSKER
PROJECT: 1337
DATE: 9/15/2014
SHEET: 2 of 4