VERMONT AGENCY OF NATURAL RESOURCES

APPLICATION FOR COVERAGE UNDER THE STREAM ALTERATION GENERAL PERMIT FOR REPORTING ACTIVITY (SECTION C.2.2)

10 VSA, SECTIONS 1022 & 7503

Agency Use Only

Project ID _____

Receipt Date _____

If >10 square miles use Individual Permit

Applicant Name Town of Jay c/o Sally Rivard

Mailing Address 1036 VT RT 242 Jay, VT 05859

Phone 802-988-2996 Cell _____ Email townofjay@comcast.net

Landowner (if different than applicant) _____

Landowner Mailing Address _____ Phone _____

Email _____

Project Location: Address Cross Road Town Jay Lat 44.953618 (approx.)

River Trib. to Jay Branch Drainage Area 3.4 sq. mi. Long -72.448104 (approx.)

Brief Project Description 40-feet pedestrian trail bridge over 30ft bankfull width stream. Bridge to be set on new timber crib abutment with crushed stone foundation at one end and new timber crib abutment pinned to existing boulder at the opposite end.

Consultant or Designer (if known) Jeremy Krohn, T.R. Fellow Engineering Phone 802-671-5752 Email jeremykrohn@trfellows.com

Contractor (if known) VYCC C/O KEEGAN TIERNEY Phone 802.434.3969, ext. 141 Email keegan.tierney@vycc.org

Required Attachments (additional information may be required after initial application review)

☐ Location Map

☐ List of adjacent landowners; names and addresses

☐ 2 copies of project design drawings including:
plan view, cross sections, existing and proposed conditions, bankfull width (channel width at high water)

APPLICANT MUST FILE COPY OF THIS APPLICATION WITH TOWN CLERK AND ADJOINERS

CERTIFICATION: I hereby certify that the information on this application is, to the best of my knowledge, true and accurate and that I have provided a copy of this application to the Clerk of the municipality in which this activity is located, the local and regional planning commissions, and to each adjoining landowner as required in the Vermont Stream Alteration Rule. **I recognize that by signing this application I am giving consent to employees of the State to enter the subject property for the purpose of processing this application and for ensuring compliance with subsequent agency decisions relating to the project.**

Print Full Name Sally Rivard

Applicant Signature Sally Rivard Date 8/20/15

NOTE: A PERMIT MAY BE REQUIRED FROM THE US ARMY CORPS OF ENGINEERS. For information contact:
US Army Corps of Engineers, VT Project Office, 11 Lincoln St - Rm210, Essex Jct VT 05452 802-872-2893

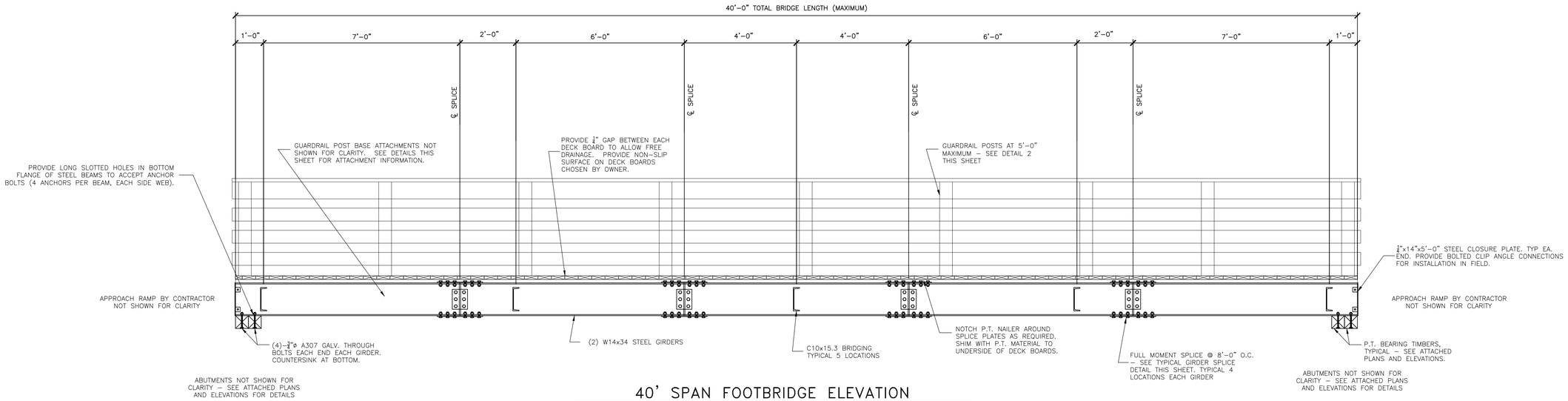

40' SPAN FOOTBRIDGE ELEVATION

SCALE: 1/2"=1'-0"

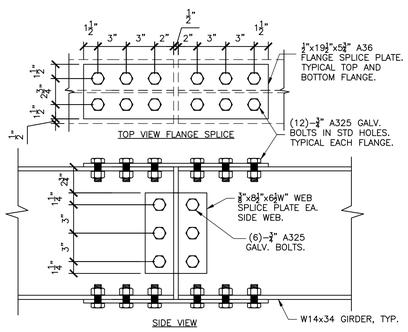

TYPICAL GIRDER SPLICE DETAIL

SCALE: 1 1/2"=1'-0"

GENERAL NOTES AND SPECIFICATIONS

1. BRIDGE STRUCTURE IS DESIGNED FOR PEDESTRIAN AND SNOW LOADING ONLY (MAXIMUM 70 PSF LIVE LOAD CONCURRENT WITH 25 PSF DEAD LOAD). BRIDGE SHALL NOT BE TRAVELED ON BY HORSES OR MECHANIZED VEHICLES INCLUDING (BUT NOT LIMITED TO) ATV'S, UTV'S, SNOW MACHINES, ETC.
2. ALL WIDE FLANGE BEAMS SHALL BE ASTM A992 Fy=50 KSI MIN. ALL REMAINING STEEL SHALL BE ASTM A36 Fy=36 KSI MIN.
3. ALL BOLTS SHALL BE 3/4" GALVANIZED ASTM A325 SNUG TIGHT HIGH STRENGTH BOLTS U.O.N. ALL FIELD CONNECTIONS SHALL BE BOLTED.
4. ALL STRUCTURAL STEEL SHALL BE HOT DIPPED GALVANIZED OR PRIME PAINTED WITH A ZINC RICH COATING.
5. ALL FASTENERS SHALL BE HOT DIPPED GALVANIZED.
6. ALL P.T. BEARING TIMBER MATERIAL SHALL BE TREATED FOR GROUND AND WATER CONTACT ACCORDING TO AWPA STANDARDS WITH MINIMUM PRESERVATIVE RETENTION NO LESS THAN 0.6 PCF. ALL OTHER P.T. MATERIAL SHALL BE HAVE MINIMUM PRESERVATIVE RETENTION NO LESS THAN 0.4 PCF.
7. ALL P.T. MATERIAL SHALL BE SOUTHERN PINE NO. 1. OR NO. 2. NO MIXTURE OF LOWER GRADES WITHIN THE SPECIES IS ALLOWED. SAWN LUMBER SHALL BE KILN DRIED TO 19% MOISTURE CONTENT.
8. PROVIDE P.T. WOOD GUARDRAIL SYSTEM PER PLANS.
9. OVERALL SLOPE OF BRIDGE DECK FROM END TO END SHALL BE 1% MAXIMUM.

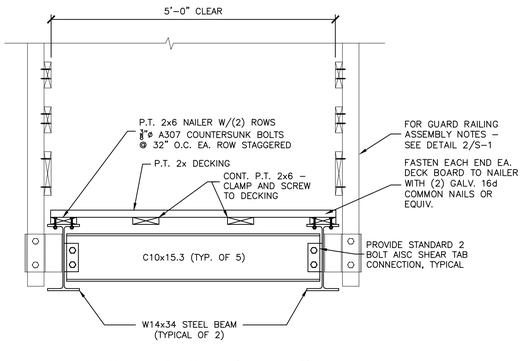

TYPICAL DECK DETAILS

SCALE: 3/4"=1'-0"

1 / S-1

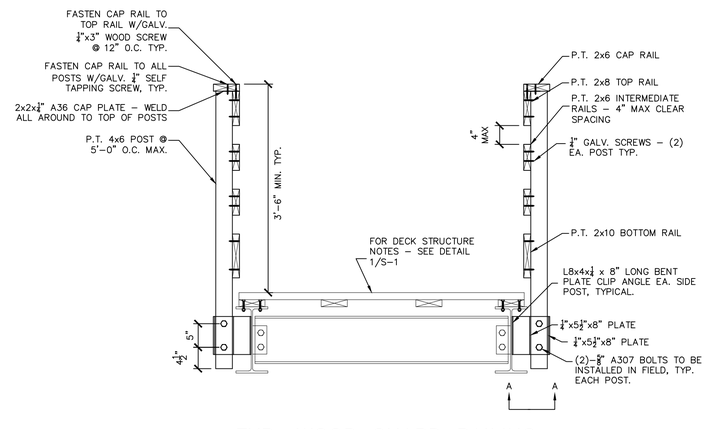

TYP. WOOD GUARD RAILING ASSEMBLY DETAILS

SCALE: 3/4"=1'-0"

2 / S-1

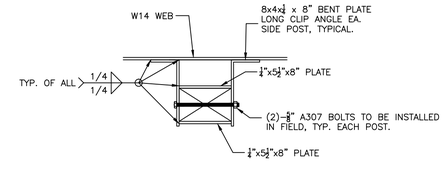

SECTION A–A

SCALE: 1 1/2"=1'-0"

T.R. FELLOWS ENGINEERING
CIVIL & STRUCTURAL
VT NH
134 COUNTY ROAD
ROCKY RIDGE, VT 05768
WALPOLE, NH 03608
TEL: 802.318.7853
TEL: 603.445.5135
FAX: 603.445.5136
tr@tfellows.com
info@tfellows.com

NO.	DATE	REVISION
1		

JAY COMMUNITY CENTRE TRAIL BRIDGE
JAY, VT

PROJECT MANAGER: KEEGAN TIERNEY, OPERATIONS DIRECTOR
VERMONT YOUTH CONSERVATION CORPS
1949 E. MAIN ST.
RICHMOND, VT 05477
PH: 802.434.3069, ext. 141

BRIDGE SUPER-STRUCTURE

STATE OF VERMONT
KRISTIN E. McCUSKER
NO. 9000
STRUCTURAL
LICENSED PROFESSIONAL ENGINEER

DRAWN BY: K. McCUSKER
CHECKED BY: T. FELLOWS
PROJECT:
DATE: AUGUST 17, 2015
SHEET: S-1

c:\Dropbox\T.R. Fellows\Projects\Jay Trail Bridge\Cad\Jay trail bridge superstructure.dwg

Landowners / Adjoiners : Jay Community Recreational Centre,
Cross Road, Jay, VT 05859 (rev: 08/20/2015)

Landowners / Adjoiners : Jay Community Recreational Centre

John Carter
1302 Lake Road
Newport, VT 05855

Gilman Housing Trust, Inc.
PO Box #86
Lyndonville, VT 05851

Jacques and Christina Higgins
2150 Djibouti Place
Dulles, VA 20189-2150

Carmen and Dixon Jackson
505 Morse Road
Jay, VT 05859

John and Brian Langelier
46 Corbett Avenue
Dedham, MA 02026

Duane and Francis Lucier
1721 Cross Road
Jay, VT 05859

Robert McKenzie
672 Belmont Avenue
Westmount, PQ
Canada H3Y2W2

Molly Moran
1605 Escalante Avenue SW
Albuquerque, NM 87104

Beverly Morse
996 Morse Road
Jay, VT 05859

Q Development, LLC
19 Grand Bay Estates Circle
Key Biscayne, FL 33149

Michael/Christopher Segalini
58 Beachwood Lane
Duxbury, MA 02332

Jean Seguin
PO Box 624
North Troy, VT 05859

Robert Shamma
229 Central Avenue
Medford, MA 02155

Jay Community Recreational Centre Right-of-Way Property Owners

Ron Gunther
960 Gendron Road
Jay, VT 05859

Tina LeBlond
PO Box 98
Troy, VT 05868

Trent Laramee
894 Gendron Road
Jay, VT 05859

Matthew Maconaughey
25470 Feltre Terrace
Chantilly, VA 20152

Randy McGunnigle
142 Forge Hill Lane
Phoenixville, PA 19460

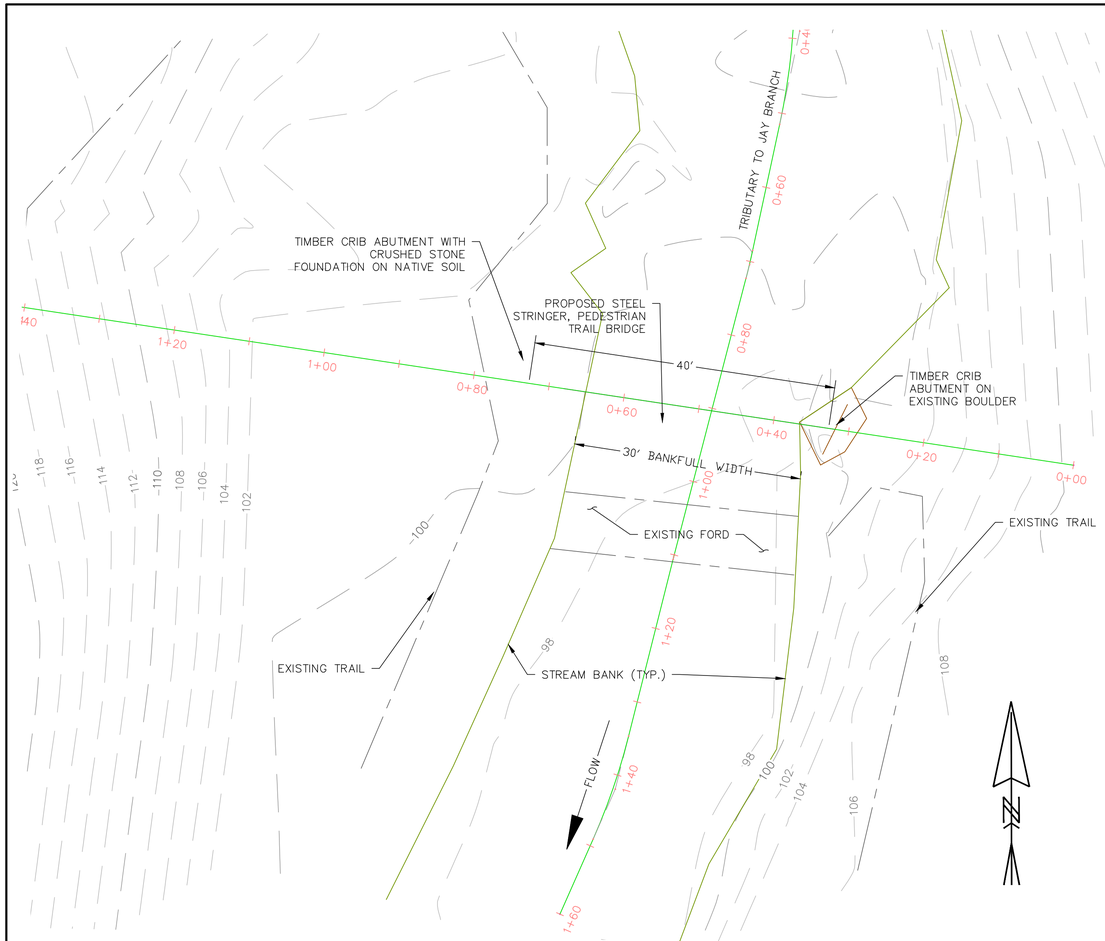

SITE PLAN

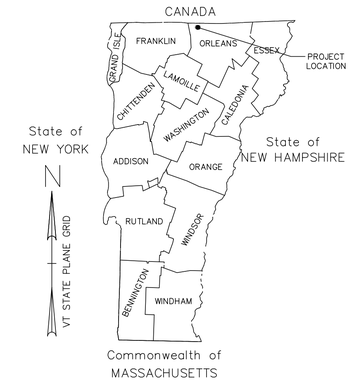

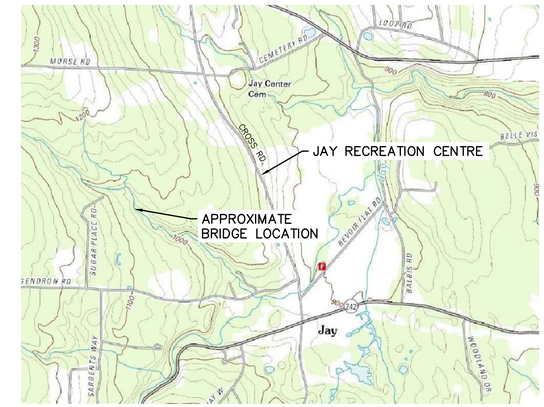

LOCATION MAP

NOT TO SCALE

GENERAL NOTES

VERTICAL AND HORIZONTAL DATUM:
BOTH VERTICAL AND HORIZONTAL DATUM ARE ASSUMED. ELEVATIONS AND BEARINGS ARE SPECIFIC TO THIS PROJECT ONLY.

PROJECT DESCRIPTION:
40 FT SPAN TRAIL BRIDGE CONSTRUCTED OVER A TRIBUTARY TO JAY BRANCH ON JAY RECREATION CENTRE PROPERTY. STEEL STRINGERS SET ON TIMBER-CRIB ABUTMENTS, WEST ABUTMENT TO BE SET ON NATIVE SOIL AND EAST ABUTMENT TO BE PINNED INTO AN EXISTING BOULDER ALONG STREAM BANK.

HYDRAULIC DATA:

DRAINAGE AREA 3.4 SQ. MILES
Q10 = 241 CFS
Q25 = 317 CFS
Q50 = 379 CFS
Q100 = 446 CFS

APPROXIMATE BANKFULL WIDTH 30 FT

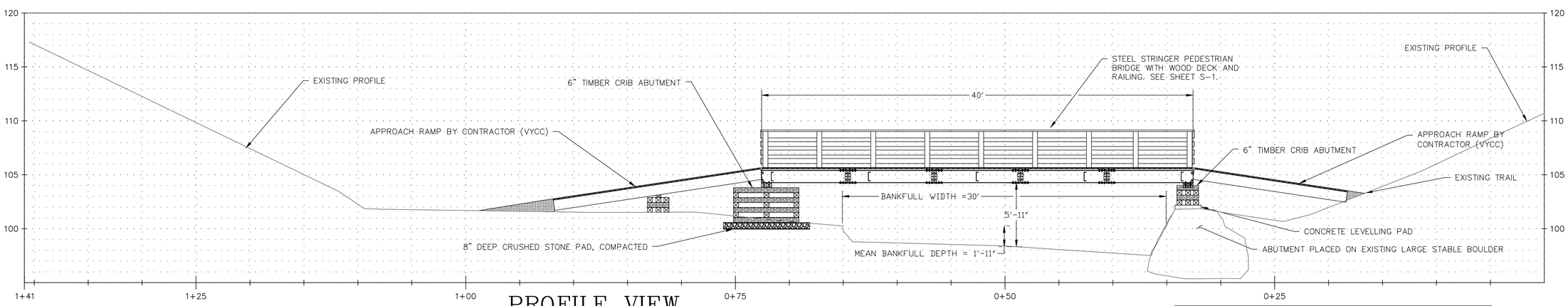

PROFILE VIEW

FOR PERMIT USE ONLY
NOT FOR CONSTRUCTION

T.R. FELLOWS
VT NH
ENGINEERING
CIVIL & STRUCTURAL
42 N. MAIN STREET
ROCHESTER, NH 03867
TEL: 603 335-2070
FAX: 603 335-2075
134 COUNTY ROAD
P.O. BOX 1456
WALPOLE, NH 03608
TEL: 802 318-7833
FAX: 603 335-2075
KRICKETT@TRFELLOWS.COM
TRFELLOWS@FAIRPOINT.NET

NO.	DATE	REVISION

JAY COMMUNITY CENTRE TRAIL BRIDGE
TRIBUTARY TO JAY BRANCH, JAY, VERMONT

PROJECT MANAGER: KEEGAN TIERNEY, OPERATIONS DIRECTOR
VERMONT YOUTH CONSERVATION CORPS
1949 E. MAIN ST.
RICHMOND, VT 05477
PH: 802-434-3969, ext. 141

PRELIMINARY PLANS FOR PERMITTING REVIEW

DRAWN BY: J. KROHN
CHECKED BY: K. McCUSKER
PROJECT: 1507
DATE: AUGUST 19, 2015
SHEET: 1 of 1

G:\Projects\T.R. Fellows\Projects\Jay Trail Bridge\CAD\Jay_existing.dwg