THIS APPROVAL IS SUBJECT TO THE TERMS
AND CONDITIONS OF STREAM ALTERATION
PERMIT# SA-04-0015-ISSUED HEREWITH
2015

BY C Burnett
DATE 5/12/14 10:4

APPROVAL
WATERSHED MANAGEMENT DIVISION

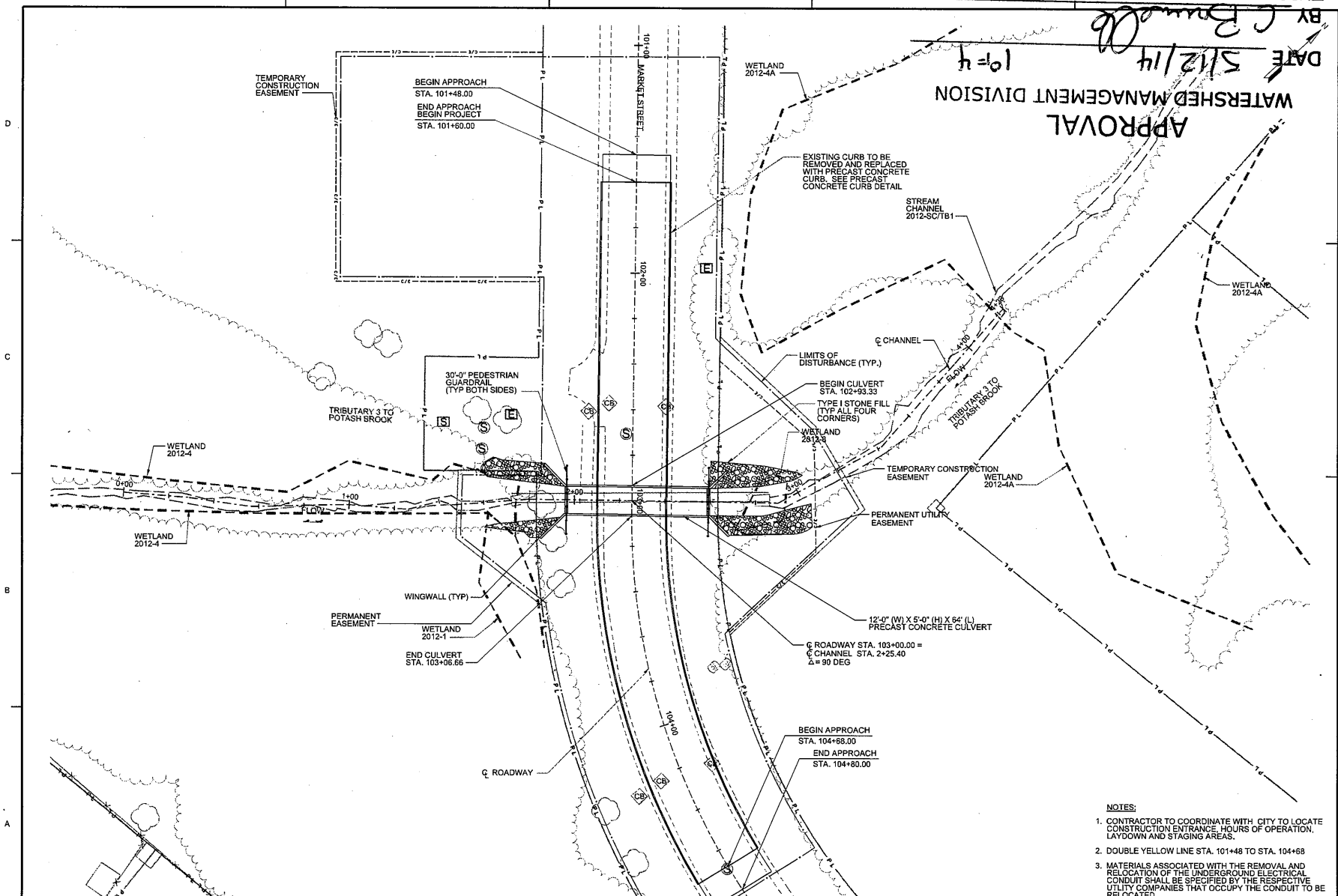

NOTES:

1. CONTRACTOR TO COORDINATE WITH CITY TO LOCATE CONSTRUCTION ENTRANCE, HOURS OF OPERATION, LAYDOWN AND STAGING AREAS.
2. DOUBLE YELLOW LINE STA. 101+48 TO STA. 104+68
3. MATERIALS ASSOCIATED WITH THE REMOVAL AND RELOCATION OF THE UNDERGROUND ELECTRICAL CONDUIT SHALL BE SPECIFIED BY THE RESPECTIVE UTLITY COMPANIES THAT OCCUPY THE CONDUIT TO BE RELOCATED.

0 20' 40'
SCALE:1"=20'

ALL DIMENSIONS/EXISTING CONDITIONS SHOWN SHALL BE CHECKED AND VERIFIED BY THE CONTRACTOR AT THE SITE. ANY DISCREPANCIES SHALL BE IMMEDIATELY REPORTED TO THE GOVERNMENT FOR CLARIFICATIONS. DRAWING SHALL NOT BE SCALED TO OBTAIN DIMENSIONS OR DISTANCES.

100% PLANS

0 1"
THIS BAR IS ONE INCH ON ORIGINAL DRAWING
IF NOT ONE INCH ON THIS SHEET, ADJUST SCALES ACCORDINGLY

South Burlington Stormwater Utility

US Army Corps of Engineers New York District

MARK	DESCRIPTION	DATE	APPR.

MARK	DESCRIPTION	DATE	APPR.

U.S. ARMY ENGINEER DISTRICT
NEW YORK
http://www.nan.usace.army.mil

Vanasse Hangen Brustlin, Inc.

DESIGNED BY: C.J.H.
DWN BY: C.J.H.
CKD BY: R.A.W.
SUBMITTED BY: R.A.W.
FILE NAME: LCBP_TRIB3_STRM_CUL_C-102PSP.dgn
SIZE: ANSI D
PLOTTED BY: J.L.L.
DATE:
SOLICITATION NO.:
CONTRACT NO.:
PLOT DATE: 5/27/2014

USACE POTASH BROOK
TRIBUTARY 3 STORMWATER TREATMENT
SECTION 542 PROJECT
SOUTH BURLINGTON, VT
100% PLANS
MARKET STREET CULVERT
LAYOUT PLAN

SHEET REFERENCE NUMBER
C-105
SHEET 20 OF 30

MAY 2010 NYD A/E BORDER

Submitted by: VHB Plot Date: 5/27/2014 12:06:24 PM
F:\57163.04\cad\te\planset\LCBP_TRIB3_STRM_CUL_C-102PSP.dgn

APPROVAL
WATERSHED MANAGEMENT DIVISION
DATE 5/12/14 2 of 4
BY C. Brunelle
THIS APPROVAL IS SUBJECT TO THE TERMS AND CONDITIONS OF STREAM ALTERATION PERMIT# SA-04-0015 ISSUED HEREWITH 2015

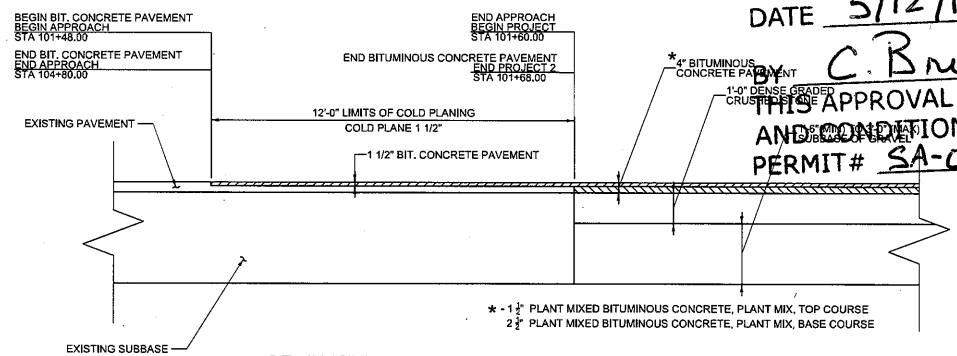

BEGIN / END APPROACH SECTION DETAIL
NOT TO SCALE

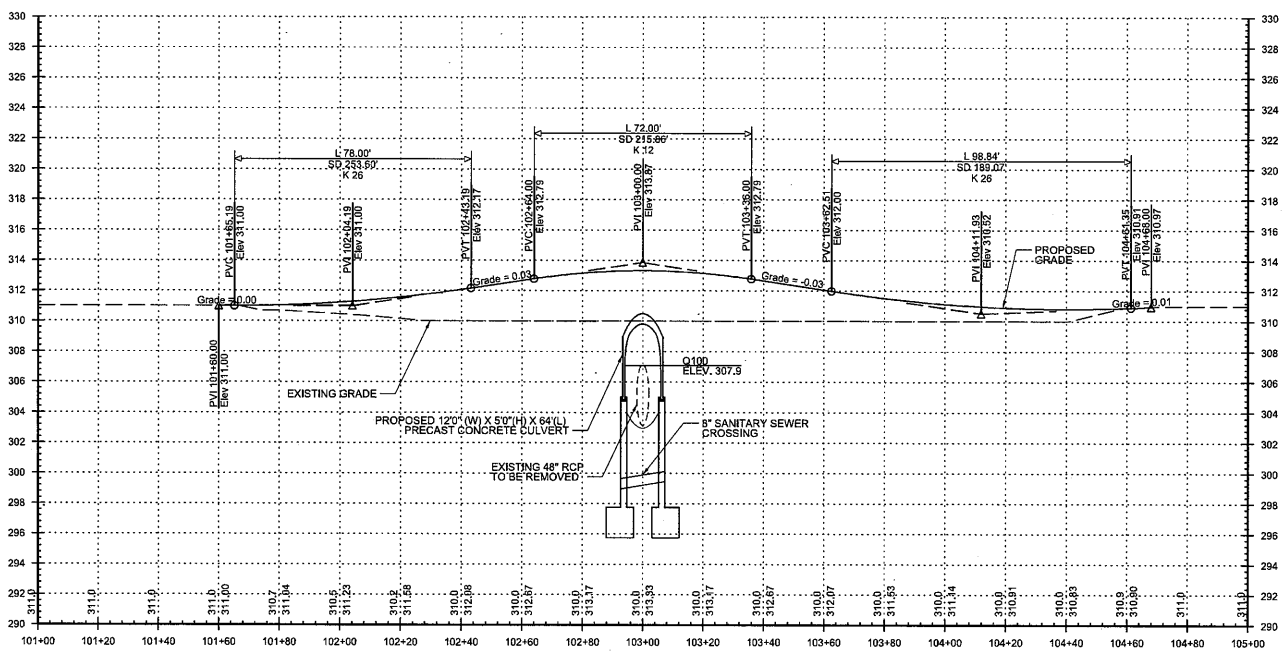

MARKET STREET PROFILE

NOTE:
CONTRACTOR TO COORDINATE WITH CITY TO LOCATE CONSTRUCTION ENTRANCE, HOURS OF OPERATION, LAYDOWN AND STAGING AREAS.

VERTICAL SCALE: 1" = 4'
HORIZONTAL SCALE: 1" = 20'

SCALE: 1"=20'

ALL DIMENSIONS/EXISTING CONDITIONS SHOWN SHALL BE CHECKED AND VERIFIED BY THE CONTRACTOR AT THE SITE. ANY DISCREPANCIES SHALL BE IMMEDIATELY REPORTED TO THE GOVERNMENT FOR CLARIFICATIONS. DRAWING SHALL NOT BE SCALED TO OBTAIN DIMENSIONS OR DISTANCES.

100% PLANS

THIS BAR IS ONE INCH ON ORIGINAL DRAWING IF NOT ONE INCH ON THIS SHEET, ADJUST SCALES ACCORDINGLY

South Burlington Stormwater Utility

US Army Corps of Engineers New York District

U.S. ARMY ENGINEER DISTRICT NEW YORK
http://www.nan.usace.army.mil

Vanasse Hangen Brustlin, Inc.

DESIGNED BY: C.J.H.
DWN BY: C.J.H.
CKD BY: R.A.W.
SUBMITTED BY: R.A.W.
FILE NAME: LCBP_TRIB3_STRM_CUL_CT301RPR.dgn
SIZE: ANSI D
PLOTTED BY: J.L.L.
PLOT DATE: 5/27/2014

USACE POTASH BROOK
TRIBUTARY 3 STORMWATER TREATMENT SECTION 542 PROJECT
SOUTH BURLINGTON, VT
100% PLANS
MARKET STREET CULVERT ROADWAY PROFILE

SHEET REFERENCE NUMBER
C-202

MAY 2010 NYD A/E BORDER

Submitted by: VHB Plot Date: 5/27/2014 12:07:00 PM
F:\57163.04\cad\te\planset\LCBP_TRIB3_STRM_CUL_CT301RPR.dgn

APPROVAL

WATERSHED MANAGEMENT DIVISION

DATE 5/12/14 3 of 3 4

BY C. Brunelle

THIS APPROVAL IS SUBJECT TO THE TERMS AND CONDITIONS OF STREAM ALTERATION PERMIT# SA-04-0015- 2015 ISSUED HEREWITH

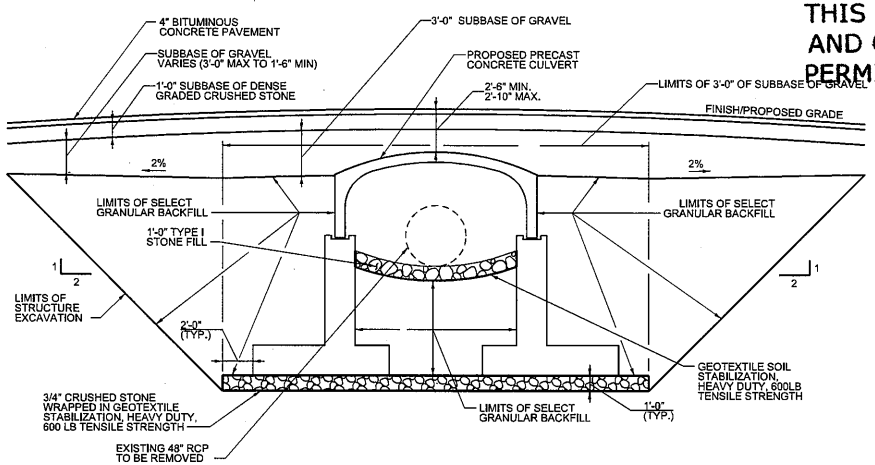

EARTHWORK - TYPICAL SECTION

¼" = 1'

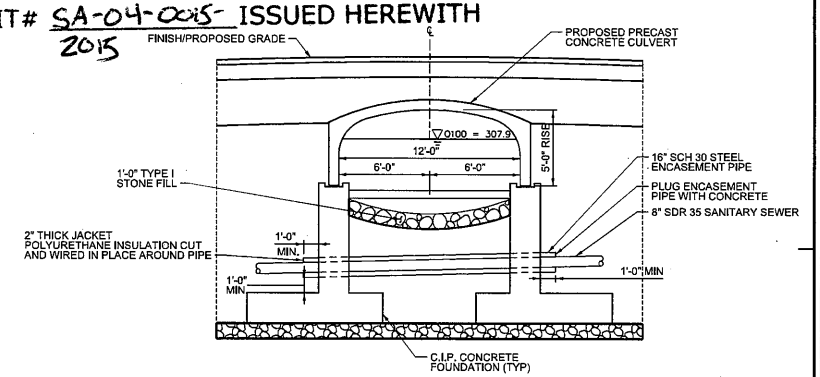

CULVERT SECTION

¼" = 1'

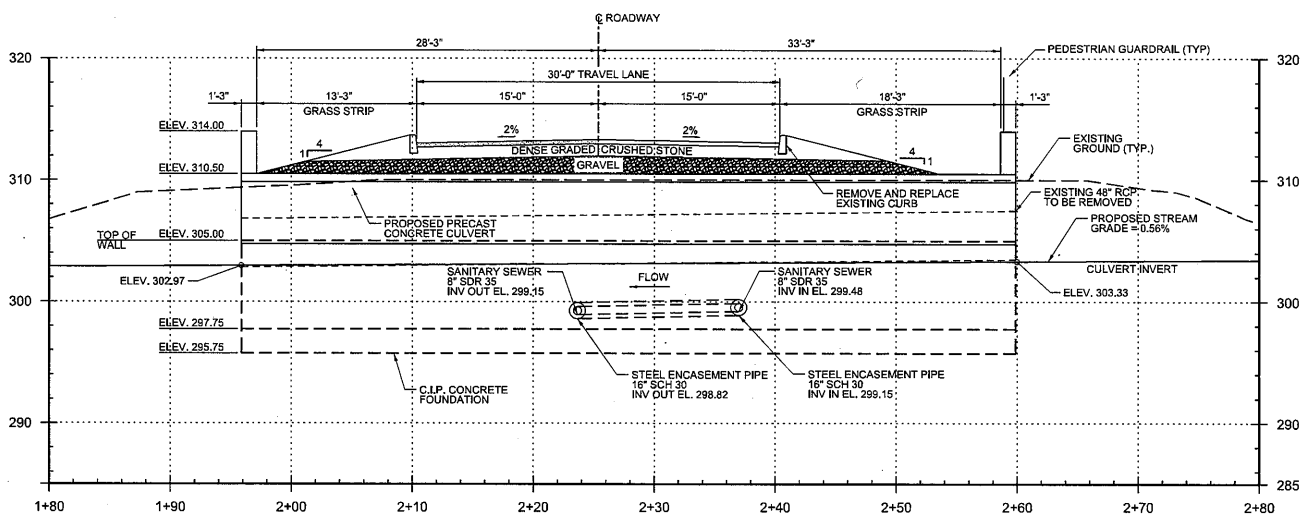

CULVERT - LONGITUDINAL SECTION

1" = 5'

ALL DIMENSIONS/EXISTING CONDITIONS SHOWN SHALL BE CHECKED AND VERIFIED BY THE CONTRACTOR AT THE SITE. ANY DISCREPANCIES SHALL BE IMMEDIATELY REPORTED TO THE GOVERNMENT FOR CLARIFICATIONS. DRAWING SHALL NOT BE SCALED TO OBTAIN DIMENSIONS OR DISTANCES.

100% PLANS

THIS BAR IS ONE INCH ON ORIGINAL DRAWING IF NOT ONE INCH ON THIS SHEET, ADJUST SCALES ACCORDINGLY

South Burlington Stormwater Utility

US Army Corps of Engineers New York District

MARK	DESCRIPTION	DATE	APPR.	MARK	DESCRIPTION	DATE	APPR.

U.S. ARMY ENGINEER DISTRICT NEW YORK

http://www.nan.usace.army.mil

DESIGNED BY: C.J.H. | DATE: | DWN BY: J.L.L. | CKD BY: R.A.W. | SOLICITATION NO.: | SUBMITTED BY: R.A.W. | CONTRACT NO.: | FILE NAME: LCBP_TRIB3_STRM_CUL_SB301SEC.dgn | PLOT SCALE: AS NOTED | PLOT DATE: 5/27/2014 | REVISED BY: A.L.L.

Tetra Tech Tetra Tech, Inc.

USACE POTASH BROOK TRIBUTARY 3 STORMWATER TREATMENT SECTION 542 PROJECT SOUTH BURLINGTON, VT 100% PLANS MARKET STREET CULVERT TYPICAL SECTIONS

SHEET REFERENCE NUMBER C-302

SHEET 26 OF 76

Submitted by: VHB Plot Date: 5/27/2014 12:07:18 PM
F:\57163.04\cad\te\planset\LCBP_TRIB3_STRM_CUL_SB301SEC.dgn

MAY 2010 NYD A/E BORDER

APPROVAL
WATERSHED MANAGEMENT DIVISION

DATE 5/12/14 4 of 4

BY C. Brunelle

THIS APPROVAL IS SUBJECT TO THE TERMS AND CONDITIONS OF STREAM ALTERATION PERMIT# SA-04-0015- 2015 ISSUED HEREWITH

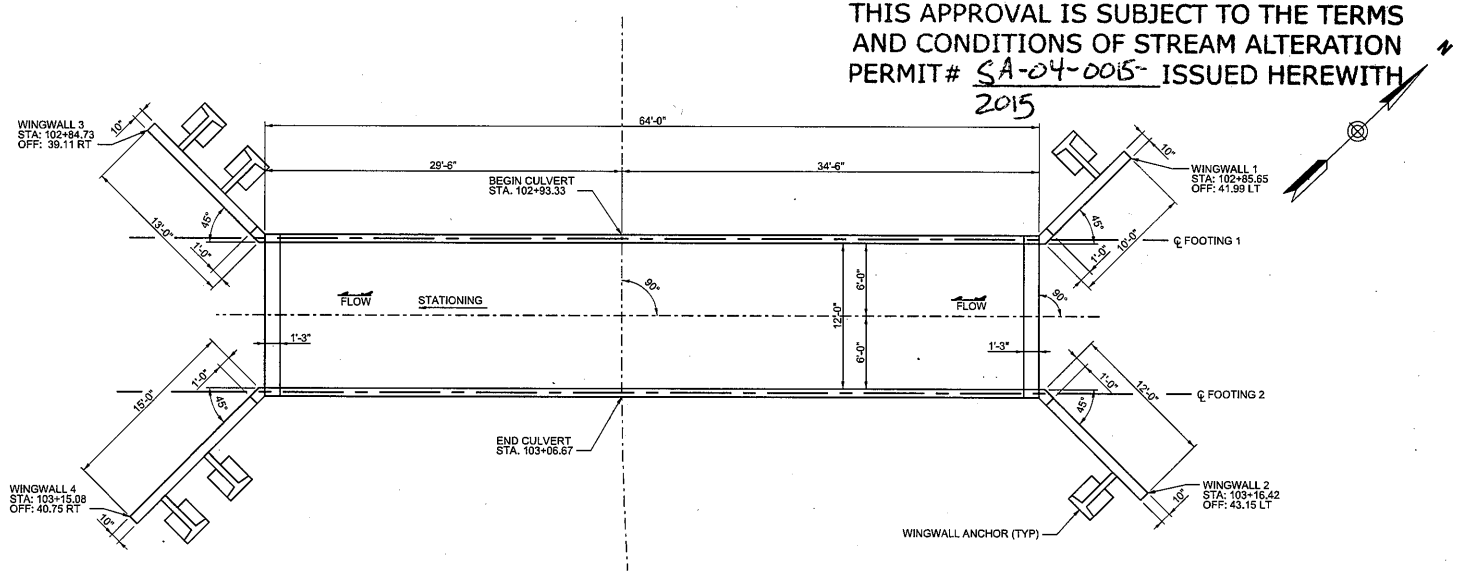

CULVERT PLAN
1" = 5'-0"

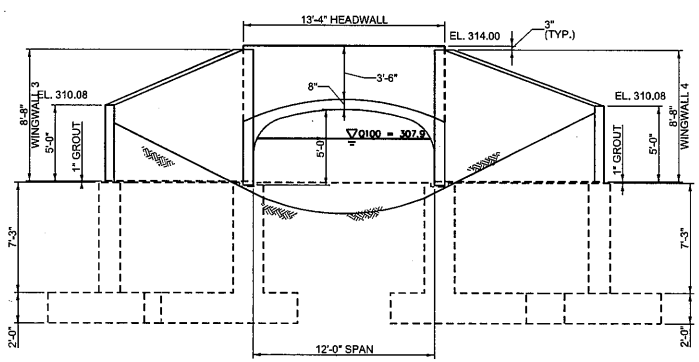

DOWNSTREAM END ELEVATION
N.T.S.

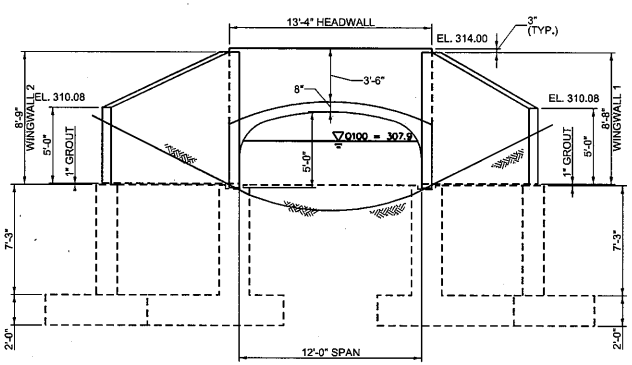

UPSTREAM END ELEVATION
N.T.S.

ALL DIMENSIONS/EXISTING CONDITIONS SHOWN SHALL BE CHECKED AND VERIFIED BY THE CONTRACTOR AT THE SITE. ANY DISCREPANCIES SHALL BE IMMEDIATELY REPORTED TO THE GOVERNMENT FOR CLARIFICATIONS. DRAWING SHALL NOT BE SCALED TO OBTAIN DIMENSIONS OR DISTANCES.

100% PLANS

THIS BAR IS ONE INCH ON ORIGINAL DRAWING IF NOT ONE INCH ON THIS SHEET, ADJUST SCALES ACCORDINGLY

South Burlington Stormwater Utility

US Army Corps of Engineers New York District

MARK	DESCRIPTION	DATE	APPR.	MARK	DESCRIPTION	DATE	APPR.

U.S. ARMY ENGINEER DISTRICT NEW YORK
http://www.nan.usace.army.mil

DESIGNED BY: C.J.H. | DATE: | SOLICITATION NO.:
DWN BY: C.J.H. | CKD BY: R.A.W. | CONTRACT NO.:
SUBMITTED BY: R.A.W.
FILE NAME: LCBP_TRIB3_STRM_CUL_S-101PEL.dgn
SIZE: ANSI D | PLOTTED BY: R.A.W. | PLOT DATE: 5/27/2014

Vanasse Hangen Brustlin, Inc.

USACE POTASH BROOK
TRIBUTARY 3 STORMWATER TREATMENT
SECTION 542 PROJECT
SOUTH BURLINGTON, VT
100% PLANS

MARKET STREET CULVERT DETAILS

SHEET REFERENCE NUMBER
S-103
SHEET 29 OF 39

MAY 2010 NYD A/E BORDER

Submitted by: VHB
F:\57163.04\cad\te\planset\LCBP_TRIB3_STRM_CUL_S-101PEL.dgn
Plot Date: 5/27/2014 12:07:30 PM