VERMONT

**Vermont Department of Environmental Conservation**
Watershed Management Division
Barre Regional Office
5 Perry Street, Suite 80
Barre, VT 05641
www.watershedmanagement.vt.gov

*Agency of Natural Resources*

[phone] 802-476-0190
[fax] 802-476-0131
[cell] 802-279-1143

# AUTHORIZATION TO CONDUCT STREAM ALTERATION ACTIVITIES

Pursuant to Section C.2.2 of the VT Stream Alteration General Permit (Reporting activities not requiring an application)

Project Number: **SA-03-** 115 **-2015**

Applicant Name: TOWN OF BRIGHTON c/o JOEL COPE

Mailing Address: P.O. BOX 377, ISLAND POND 05846 Phone: _____

Project Location HEAD OF THE POND RD (TH 5) Email: joelcope@comcast.net

The Secretary of the Vermont Agency of Natural Resources (VT ANR) has determined that:

1. This project authorizes the replacement of a 48" culvert with a new 12' x 7' reinforced concrete box, buried 24" and infilled with 'E2' material.
2. The proposed activity is eligible for coverage under the VT ANR Stream Alteration General Permit.
3. The proposed activity will meet the terms and conditions of the General Permit provided:
   a) The project will be completed and approved as shown on the plan dated 2-16-15, prepared by VTrans District 9, and approved by the Vermont Agency of Natural Resources.
   b) The project will not adversely affect the public safety by increasing flood hazards.
   c) The project will not significantly damage fish life or wildlife.
   d) The project will not significantly damage the rights of riparian owners.
   e) The project will not obstruct the movement of aquatic life indigenous to the waterbody beyond the actual duration of construction.
   f) The project is conducted in a manner which minimizes or avoids any discharge of sediment or other pollutants to surface waters in violation of the VT Water Quality Standards.
   g) The ANR River Management Engineer is notified by phone or email when construction begins and when the project is complete.
   h) A final construction inspection is required for all culvert and bridge projects.
   i) In-stream working dates are from June 1st through October 1st; any in-stream work outside these dates will require an Individual Stream Alteration Permit authorization by the River Management Engineer.
   j) This authorization has been posted for three days public comment. This authorization constitutes final approval.
   k) Additional Conditions for this project: 1.) Water bypass plan required.
   2.) Follow Low Risk Site Handbook for EP&SC ANR 2006.

If there are any changes in the project plan or deviation in construction from the plan, the Permittee must notify the River Management Engineer immediately.

If the project is constructed as you have described, as shown on the above referenced approved plans and according to the above conditions, there is no reason to expect any violation of Vermont Water Quality Standards.

David K. Mears, Commissioner
Department of Environmental Conservation

by: Patrick Ross dated: 4-15-2015
Patrick Ross, P.E., River Management Engineer

# Brighton, Head of the Pond Rd. Plan View

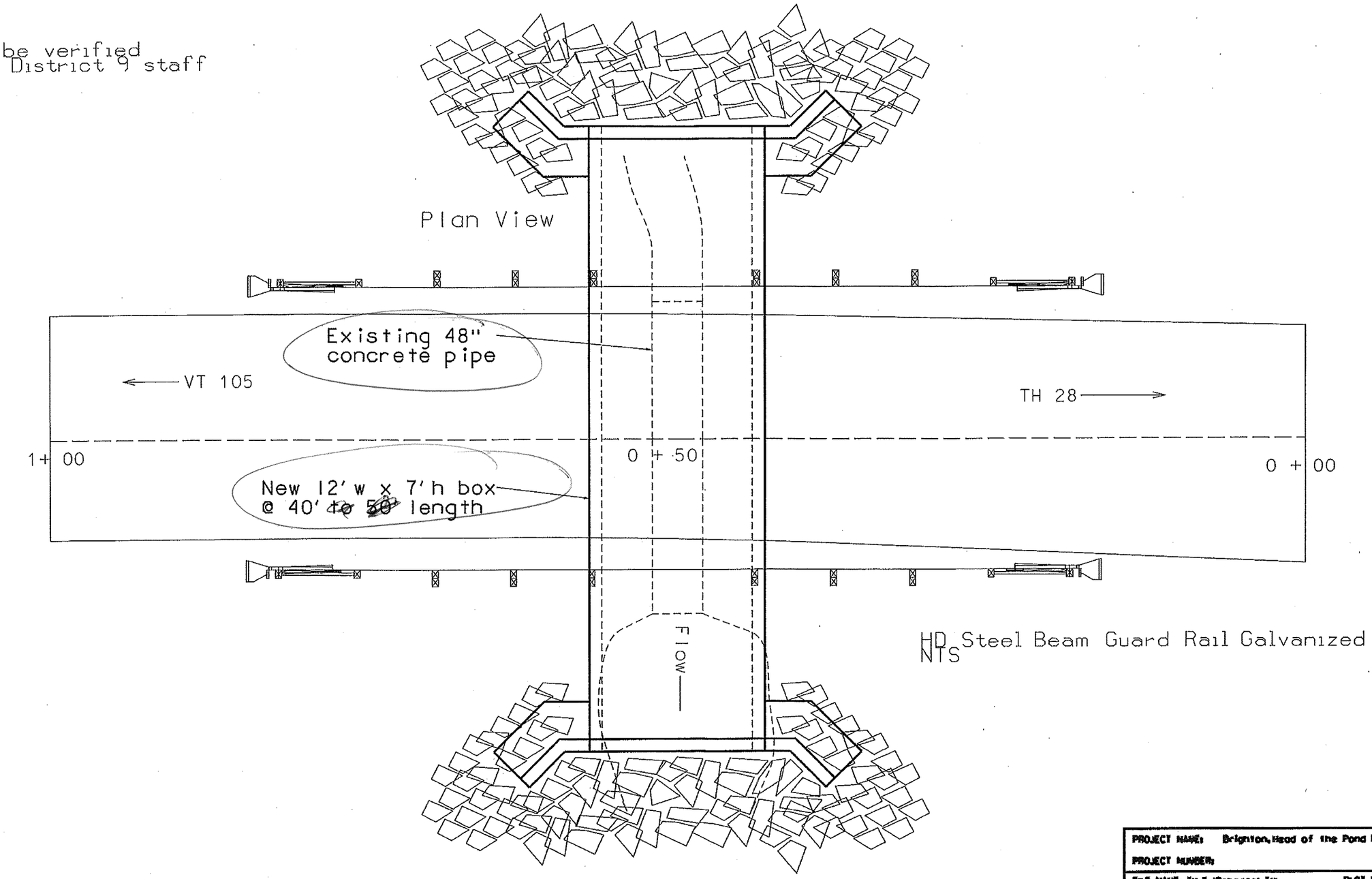


| | |
|---|---|
| PROJECT NAME: Brighton, Head of the Pond Rd | |
| PROJECT NUMBER: | |
| FILE NAME: TH 5 (Roberts).TM | PLOT DATE: ssssDATEsss |
| DESIGNED BY: | DRAWN BY: |
| | CHECKED BY: |
| | SHEET 3 OF 10 |

# Brighton, Head of the Pond Rd. Section View

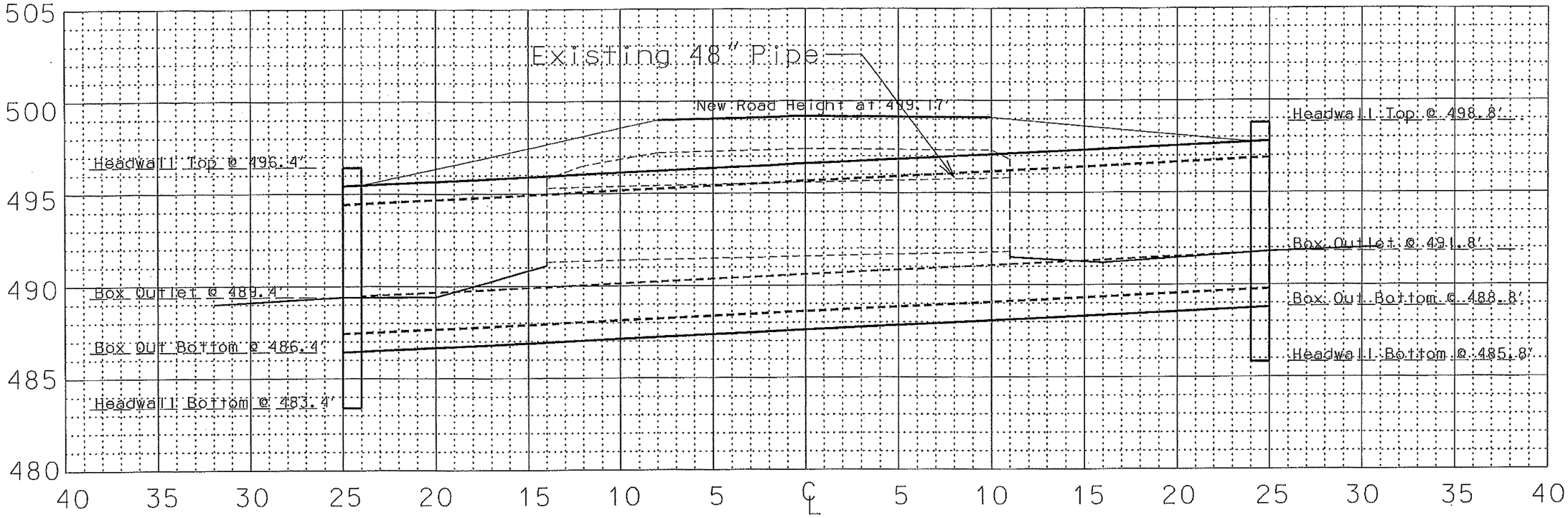


Will be Precast

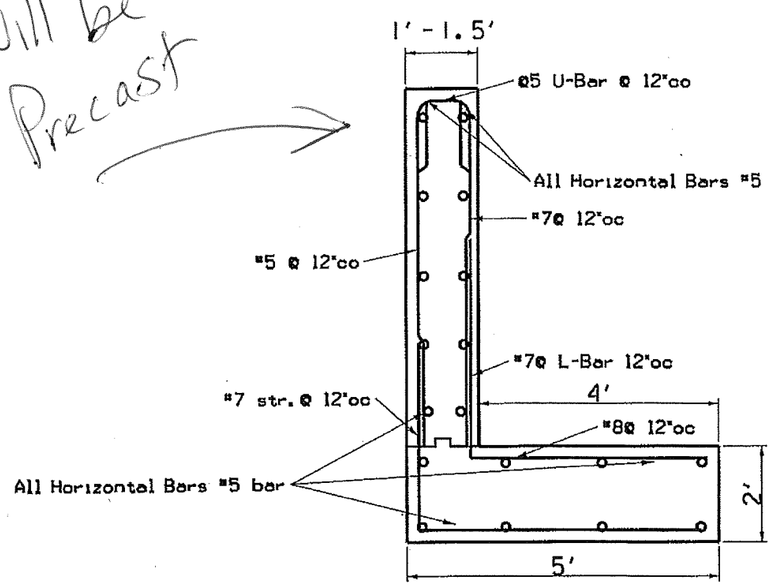


Headwall Footing Typical (NTS)

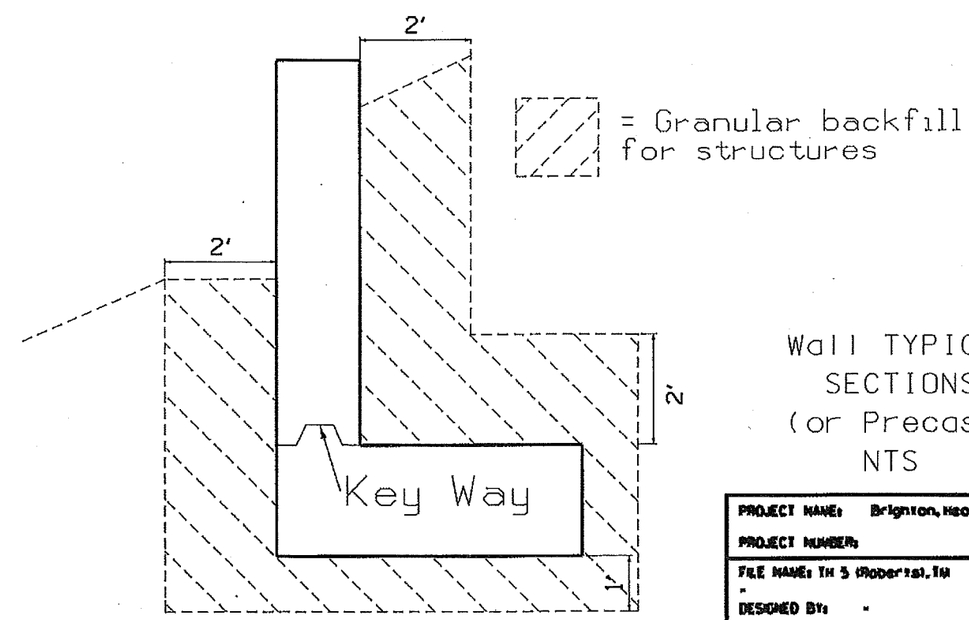


Wall TYPICAL SECTIONS (or Precast) NTS

| | |
|---|---|
| PROJECT NAME: Brighton, Head of the Pond Rd | |
| PROJECT NUMBER: | |
| FILE NAME: TH 5 (Roberts).TIN | PLOT DATE: 2/18/15 |
| " | DRAWN BY: " |
| DESIGNED BY: " | CHECKED BY: " |
| | SHEET 4 OF 10 |

Inlet Channel Cross Section @ 25' RT

Existing Inlet Elevation = 491.80

New Inlet Elevation = 491.8

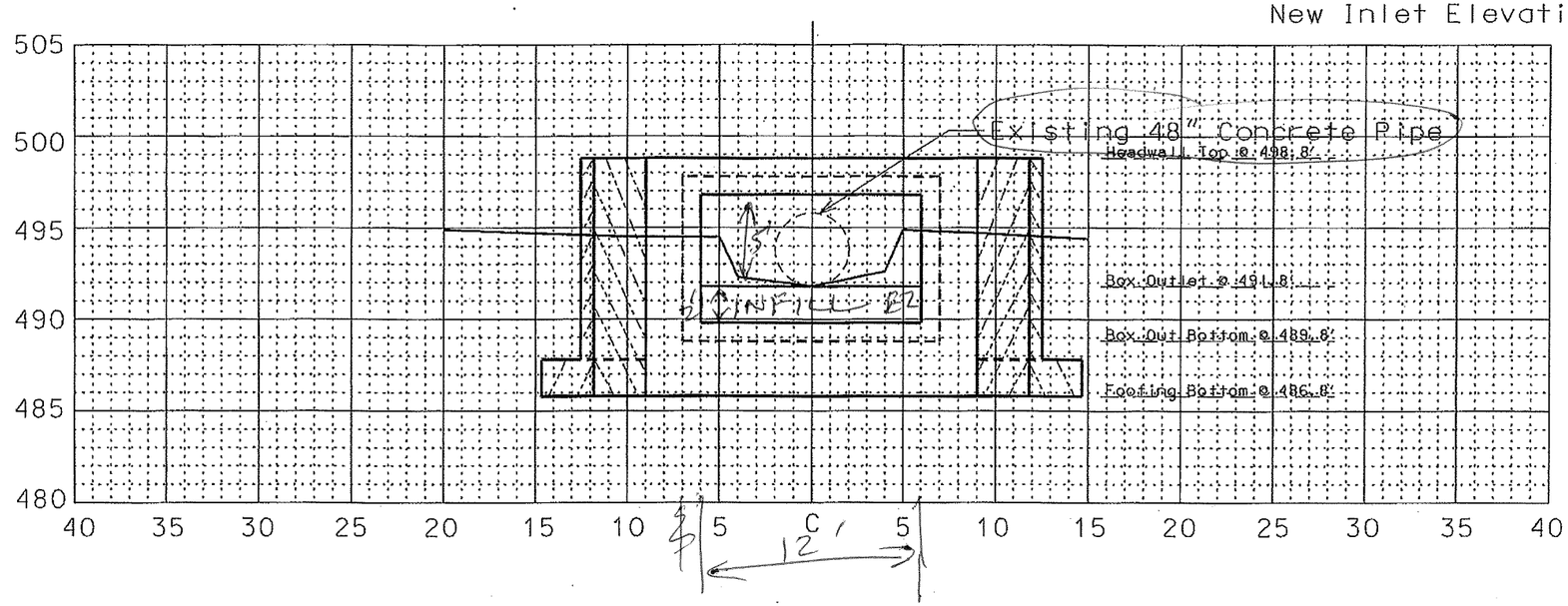


Note: X-sections may be adjusted based on length of Box selected

Outlet Channel Cross Section @ 25' LT

Existing Outlet Elevation = 491.3

New Outlet Elevation = 489.4

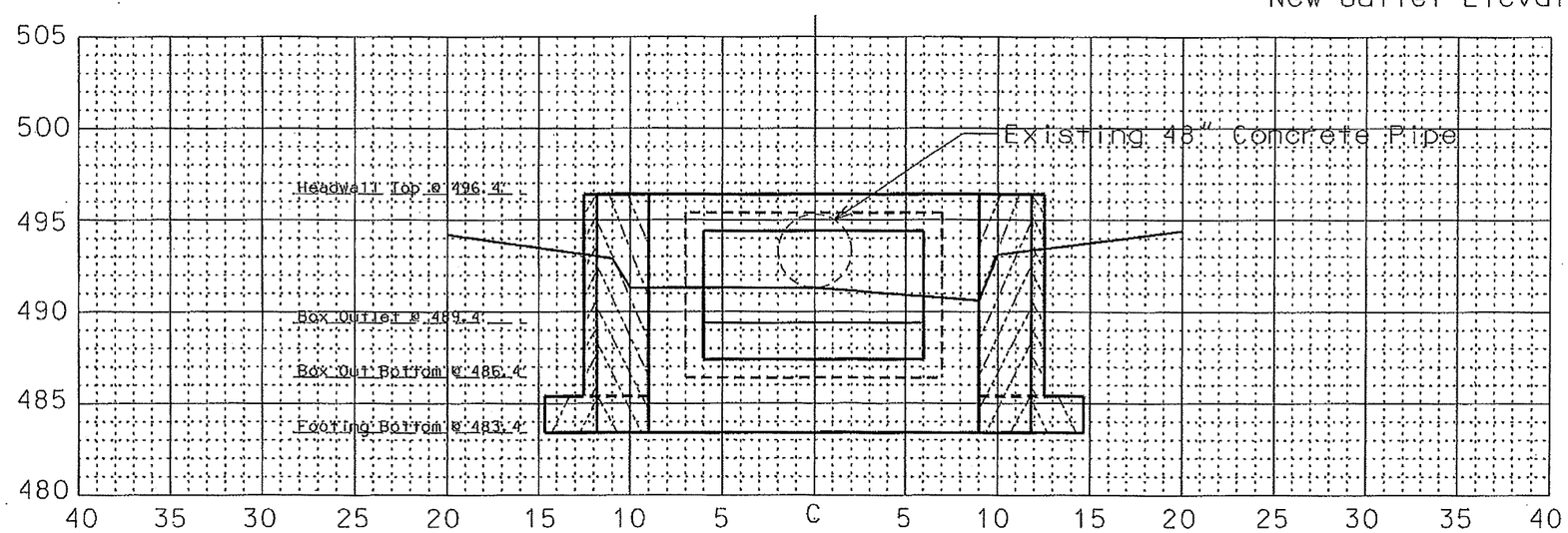


| | |
|---|---|
| PROJECT NAME: Brighton, Head of the Pond Rd | |
| PROJECT NUMBER: | |
| FILE NAME: TH 5 Roberts1.TM | PLOT DATE: 2/18/15 |
| - | DRAWN BY: - |
| DESIGNED BY: - | CHECKED BY: - |
| | SHEET 5 OF 10 |

# General Notes

Existing Conditions:
The existing structure is a 48"

---

Install a new 12'w x 7'h 40' ~~50'~~ Concrete Box with new Inlet, Outlet Headwalls, and Flared Wingwalls buried 4' below stream bed.

A minimum of 2' of cover over the Concrete Box is necessary. The existing Road elevation will need to be raised to have adequate cover. The box will be buried 1'-2' below the stream bed, giving a 12'W x 6'H inside opening.

It should be equipped with a headwall and flared wingwalls at the inlet and outlet, to smoothly transition flow through the structure, and to protect the structure and roadway approaches from erosion. The wingwalls should match into the channel banks. Any new structure should be properly aligned with the channel, and constructed on a grade that matches the channel.

Stone Fill, Type II, III, IV should be used to protect any disturbed channel banks or roadway slopes at the structure's inlet and outlet.

INFILL MATERIAL
24" OF E2

All materials and construction shall conform to the state of Vermont Agency of Transportation 2011 Standard Specifications for Highway and Bridge Construction and the 6th edition of the AASHTO LRFD bridge design specification and its latest revisions.

In-stream construction shall occur only within the timeframe outlined in the project permits. If the contractor proposes to perform in stream work outside of these timeframes, the contractor shall obtain written approval from the appropriate regulating entities prior to performing the work.

The box culvert including the sills shall be precast. The wing/headwalls may be either precast or cast in place. The design of the culvert shall be the responsibility of the fabricator. The culvert shall be designed to applicable standards.

The contractor shall submit fabrication drawings for the box culverts and all associated details for the approval of the Vtrans District Engineer in accordance with subsection 105.03 of the standard specifications for construction.

The box culvert typical sections shown in the drawings are for schematic purposes only. The actual shape of the box culvert and its components will be dependent on the fabricator.

All box culvert joints shall be strengthened with permanent closure hardware. All hardware components shall be galvanized in accordance with subsection 506.15 of the standard specifications.

After box culvert sections have been set in their final position, the exterior (top and sides) and interior (sides and bottom) of all box culvert joints, and all lifting holes, shall be filled with mortar, type IV. All mortar shall be wet cured a minimum of 12 hours or until the compressive strength has reached 2000 PSI, prior to the application of any waterproofing, approved curing compounds may be used on interior surfaces in lieu of wet curing.

A two foot wide strip of membrane waterproofing shall be applied at each side joint. The membrane shall be centered on the joint and shall run the entire height of the joint. Entire top of the box culvert shall then be covered with membrane. The membrane sheets shall overlap the edges of the culvert by one foot on each side.

SIMULATED STREAM BED
BED MATERIAL TO BE PLACED IN THE RECONSTRUCTED CHANNEL AND BOX CULVERT IS INTENDED TO MIMIC THE NATIVE CHANNEL. THE MATERIAL SHALL BE Type E2 STONE FILL. THE LONGEST DIMENSION OF THE STONE SHALL BE AT LEAST 24 INCHES, AND AT LEAST 50 PERCENT OF THE VOLUME OF THE STONE IN PLACE SHALL HAVE A LEAST DIMENSION OF 18 INCHES, AND AT LEAST 25 PERCENT OF THE PARTICLES SHALL HAVE A MAXIMUM DIMENSION OF 2 INCHES AND BE WELL GRADED MATERIAL.

INSTALLATION OF THE BED MATERIAL MAY REQUIRE INDIVIDUAL PLACEMENT OF LARGE STONE AT SPECIFIC LOCATION, AS DIRECTED BY THE ENGINEER. THE BED MATERIAL IS SUBJECT TO APPROVAL BY THE ENGINEER AND THE AGENCY OF NATURAL RESOURCES STREAM ALTERATIONS ENGINEER PAT ROSS.

TRAFFIC CONTROL
THE CONTRACTOR SHALL DEVELOP AND IMPLEMENT A SITE SPECIFIC TRAFFIC CONTROL PLAN FOR ONE LANE CLOSURE PER THE LATEST VERSION OF THE MUTCD.

UTILITY
THE CONTRACTOR IS ADVISED TO EXERCISE CAUTION WHILE WORKING IN AREAS OF UTILITIES.
CONTRACTOR SHALL PLAN THE WORK ACCORDINGLY.
ALL DIG SAFE REQUIREMENTS ARE APPLICABLE.
ADDITIONAL POSSIBLE UTILITIES
VERMONT ELECTRIC CO- OP
FAIR POINT
COMCAST

## SEEDING FORMULA
## RURAL AREAS

| % WT. | LBS./A. | NAME | PUR % | GERM % |
|---|---|---|---|---|
| 37.5 | 22.5 | CREEPING RED FESCUE | 98 | 85 |
| 37.5 | 22.5 | TALL FESCUE | 95 | 90 |
| 5.0 | 3.0 | RED TOP | 95 | 90 |
| 15.0 | 9.0 | BIRDSFOOT TREFOIL | 98 | 85 |
| 5.0 | 3.0 | ANNUAL RYEGRASS | 95 | 85 |
| 100.0 | 60.0 | | | |

### GENERAL NOTES

SEED MIXTURE: SHALL NOT HAVE A WEED CONTENT EXCEEDING 0.40% BY WEIGHT AND SHALL BE FREE OF ALL NOXIOUS SEED.

SEED: TO BE APPLIED PER SEEDING FORMULAS OR AS DIRECTED BY THE ENGINEER.

FERTILIZER: FORMULA 10-20-10, TO BE USED WITH SEED, APPLIED AT THE RATE OF 500 LBS./ACRE. (HYDRO SEEDERS MAY USE 19-19-19 FORMULA).

AGRICULTURAL LIMESTONE: TO BE APPLIED AT THE RATE OF 2 TONS/ACRE, OR AS DIRECTED BY THE ENGINEER.

HAY MULCH: TO BE PLACED ON EARTH SLOPES AT THE RATE OF 2 TONS/ACRE, OR AS DIRECTED BY THE ENGINEER.

TOPSOIL: TO BE USED WITH SEED AS INDICATED ON THE PLANS, OR AS DIRECTED BY THE ENGINEER.

MARKER POSTS: TO BE PLACED AS INDICATED OR AS DIRECTED BY THE ENGINEER.

SLOPE ROUNDING: ALL CUT SLOPES TO BE ROUNDED IN ACCORDANCE WITH STANDARD SHEET B - 5.

PAY LIMITS OF SAND BORROW: WHEN USED IN CONJUNCTION WITH UNDERDRAIN - SEE STANDARD SHEET D - 2.

PROJECT NAME: Morgan, Bear Mtn Rd
PROJECT NUMBER: Morgan, Bear Mtn Rd

FILE NAME: Morgan, Bear Mtn Rd
PROJECT LEADER: S. Keysar & S. Morin
DESIGNED BY: -
PLOT DATE: 2/18/15
DRAWN BY: T. Matthews
CHECKED BY: -
SHEET 2 OF 10