H. Lowry Tribble, Jr., P.E.
William F. Hodges, P.E.
W. Michael Stubbs, P.E.
R. Brant Lane, P.E.
Clint L. Courson, CHMM
K. Matthew Cheek, P.E.
Daniel E. Cheek, P.E.
Kevin G. Berry, P.E.

HHNT
Hodges, Harbin, Newberry & Tribble, Inc.
Consulting Engineers

Nathan D. Dunn, P.E.
Ryan S. Willoughby, P.E.
William A. Granich, P.E.
Robert D. Heller, CHMM
Eric P. Jackson, P.E.
David E. Battson, P.E.
Ryan S. Peters, P.E.
William M. Reese, P.E.

October 8, 2015

Ben Gauthier
Solid Waste Management Program
Waste Management & Prevention Division
1 National Life Dr. - Davis 1
Montpelier VT 05620-3704

Re: Moretown Landfill, Inc.
Cell 3 Odor Maintenance & Preventative Action Plan
HHNT Project No. 1210-372-01

Dear Mr. Gauthier:

As requested in your letter dated October 2, 2015, the requested edits have been made to the Odor Plan. Based on your letter and the revisions attached, it is our understanding that the attached Plan is approved.

Should you have any questions, please call.

Sincerely,

HODGES, HARBIN, NEWBERRY & TRIBBLE, INC.

W. Michael Stubbs, P.E.
Professional Engineer

WMS/cw

Enclosure

cc: Adam Sowatzka (w/ enclosure)

Cell 3 Odor Maintenance & Preventative Action Plan

Moretown Landfill, Inc.
Moretown, Vermont

Submitted to:

State of Vermont
Air Pollution Control Division
Davis Building – 2nd Floor
One National Life Drive
Montpelier, VT 05602

For:

Moretown Landfill, Inc.
19 Kaiser Drive
Waterbury, VT 05676

Prepared by:

Tech Environmental, Inc.
303 Wyman Street, Suite 295
Waltham, MA 02451

Revisions for October 2, 2015 Prepared by Hodges, Harbin, Newberry, & Tribble, Inc.

TABLE OF CONTENTS

Section	Contents	Page
1.0	**INTRODUCTION**	1
1.1	Background	2
1.2	Regulatory Requirements	4
1.3	Facility Contacts	5
2.0	**ODOR BASELINE AND ODOR AWARENESS**	6
2.1	Odor Primer	6
2.2	Hydrogen Sulfide	7
2.3	Odor Nuisance Threshold	8
2.4	Odor Training	8
2.5	Waste Acceptance & Odor Potential	9
2.6	Odor Patrols	9
2.7	Surface Emission Monitoring	11
2.8	Odor Complaint Program	13
3.0	**LANDFILL GAS COLLECTION SYSTEM**	15
3.1	Gas Collection System Evaluations	15
3.2	Condensate Checks & Gas Balancing	16
3.3	Gas Well Monitoring and Balancing	17
3.4	Gas Well Maintenance	18
3.5	Flare Maintenance	18
3.6	Preventative Maintenance	19
3.7	Pump Maintenance	20
4.0	**MONITORING & RECORD KEEPING**	21
4.1	Landfill Liner Monitoring	21
4.2	H_2S Monitoring	21
4.3	Stormwater Management Evaluations	21
4.4	Leachate Management Plans	22
4.5	Record Keeping	22
4.6	Emergency Reporting	23
5.0	**SPECIFIC ODOR CONTROL PROCEDURES**	24
5.1	Odor Control for Breeching the Cap	24
5.2	Odor Control for Excavating into Waste	24
5.3	Odor Control for Clean Out or Wellhead Replacements Procedures	24
5.4	Odor Control for Replacing Wells	25
6.0	**LONG-TERM FINANCIAL COMMITMENT TO ODOR CONTROL**	26

APPENDICES

Appendix A Odor Patrol Log
Appendix B Odor Complaint Response Form
Appendix C Surface Emissions Monitoring Plan
Appendix D O&M Manual for LFG and Condensate Management Systems
Appendix E Environmental Monitoring Location Plan
Appendix F Activity Frequency Table

1.0 INTRODUCTION

Pursuant to Paragraph 23 of the Consent Order and Judgment Order, Docket No. 37-3-13 VTEC("CO"), which was entered into between the Vermont Department of Environmental Conservation ("VTDEC") and Moretown Landfill Inc. ("MLI"), the following is the Odor Maintenance & Preventative Action Plan ("Odor Plan") for Cell 3 and will be applicable until post closure certification.

This Odor Plan takes into consideration that portions of Cells 1, 2, and 3 are not yet fully capped. In the future, the frequency of many tasks to monitor odor is expected to decrease as outlined in this Odor Plan because the potential for rapid changes in the odor baseline will be reduced after permanent capping is completed. Further, there is expected to be a second decline in odor monitoring frequency, once the hydrogen sulfide level ("H_2S") and the landfill gas ("LFG") begin to naturally decrease from Cells 1 to 3. The reduction of frequency of various tasks generally involves performance based criteria as discussed below. However, MLI's commitment to odor control will continue as demonstrated by the Company's long-term financial commitment to odor control, but the frequency of certain tasks will be reduced.

As set forth in the CO, this Odor Plan contains the following:

Requirement	Location in Odor Plan
Operations and maintenance manual for the landfill gas and condensate management systems	See Section 3.2, Appendix D
Gas well monitoring and balancing procedures and responsibilities	See Section 3.3 and Section 3.4, Appendix D
Update to the post-closure plan for Cell 3 to include annual odor and gas maintenance costs	See Section 6.0
Preventative maintenance provisions	See Section 3.6
Ongoing monthly gas system monitoring, including but not limited to the existing monitoring and reporting	See Section 4.1 and Section 4.2
Record keeping and reporting requirements	See Section 4.5 and Section 4.6
Standard operational procedures for odor control	See Section 5
An annual budget allotment for odor control	See Section 6.0
Gas well pump and well replacement/addition plan	See Section 3.1, Appendix D
Gas well liquid level monitoring schedule	See Section 3.1, Appendix D
Odor control Standard Operating Procedure ("SOP") for any activities that breach the cap, excavate into waste, or require removal of cleanouts or wellheads	See Section 5.1, Section 5.2 and Section 5.3
Leachate odors control procedures	See Section 4.3 and Section 4.4
Odor patrol/inspections plan	See Section 2.6, Appendix A, Appendix E
Procedures in case of complaints or confirmed off-site odors	See Section 2.8, Appendix B
Gas system extraction and combustion plant maintenance	See Section 3.4 and Section 3.5, Appendix D
Ongoing monitoring plan for methane and hydrogen sulfide at compliance points	See Section 2.7, Section 3.3 and Section 3.5, Appendix A, Appendix C, Appendix D
H_2S and methane action levels and minimum response actions at various action levels and averaging times	See Section 2.7

1.1 Background

MLI's facility provides solid waste disposal services to the Mad River Resource Management Alliance, which consists of the towns of Duxbury, Fayston, Moretown, Northfield, Roxbury, Waitsfield, Warren and Waterbury. The facility currently consists of four waste disposal areas (three closed and capped, and one lined landfill in the process of being closed). Cells 1 and 2 are

closed while Cell 3 was actively receiving waste until July 15, 2013. The location of the landfill is shown in Figure 1-1.

Historically, the property was operated as a sand and gravel extraction business. The property owner then began to accept waste and ultimately developed the property into the "town dump," which was essentially an unlined landfill. We understand that a landfill of some type has been operated on the property for at least the last 30 years. The unlined landfill was operated until approximately 1993/1994. The first lined landfill cell (Cell 1) was constructed at the facility when the unlined landfill was closed. Cell 1 was operated from this time until approximately 1999. Afterwards, Cell 2 was constructed and began operating. The landfill expanded again in 2005/2006 by constructing the first sub-cell of Cell 3.

The landfill is also home to a landfill gas to energy ("LFGTE"), which is owned and operated by PPL Renewable Energy, LLC ("PPL"). The LFGTE facility consists of two existing Caterpillar G3520C LE landfill gas fired internal combustion engine generators. Any excess LFG collected and not combusted in the engines, as well as generated during periods of the engines may be off-line, is combusted by an on-site flare.

MLI initially intended to pursue the expansion of the landfill, through an application for a 4th Cell ("Cell 4"). The Cell 4 expansion project would have consisted of constructing a new 27 acre lined landfill cell (including the "lay back" area) to the south of the existing landfill, which would have provided approximately 3.4 million cubic yards of airspace. The Cell 4 application has been withdrawn by MLI. This Odor Plan is intended to serve as the Odor plan until the facility receives final closure and outlines operations for odor control during post closure until this plan is updated as part of the final post closure plan required as part of the ANR March 6, 2015 letter.

Given that Cell 3 is no longer receiving waste, odor is now managed primarily by MLI through the use of an active gas collection and control system ("GCCS"). Previously, the application of daily cover and intermediate cover and the prohibition of the disposal of odoriferous wastes were also used to control odor. Although no longer accepting waste, MLI continues to retain LFG/odor technicians as part of the operational staff. These LFG/odor technicians maintain, operate, and monitor the LFG collection and control system and also address odor issues related to the landfill.

This Odor Plan will be implemented and will remain valid for the landfill lifecycle unless it is superseded by a new Odor Plan (i.e. updated Odor Plan at Post Closure Plan approval). It assumes that Cells 1, 2 and 3 will be capped in the very near future. Once that occurs, odor patrols and other odor related activities will still be necessary, but the frequency will be much less because the potential for a rapid change in baseline odor is much less. Similarly, as the landfill gas created in Cells 1 through 3 decreases with time after permanent capping, the frequency requirements will continue to decrease. The timeline ranges are discussed throughout this Odor Plan.

1.2 Regulatory Requirements

Emissions of odor from the landfill are regulated by the Vermont Air Pollution Control Regulation 5-241.

The Odor Plan, in addition to meeting the requirements of the CO, is designed to meet the requirements of the Vermont Air Pollution Control Regulation 5-241.

Additionally, emissions of odor from the landfill are regulated by the following VTDEC Solid Waste Management Rules:

> §6-606(b)(2)(J) Discrete Disposal Facilities: Facilities shall assure the control and treatment, if determined necessary by the Secretary, of gases resulting from the decomposition of wastes to prevent hazards to public health and safety, the environment, or the creation of a nuisance.
>
> §6-701(6) General Standards Applicable to All Facilities: The owner and operator shall take all steps necessary to prevent and/or control spills, nuisance dust, vectors, windblown debris, and odors.
>
> §6-702(d)(5) Discrete Disposal Facilities: With the exception of construction and demolition waste landfills, cover material shall be in place at the end of each operating day, or at more frequent intervals if necessary, to control disease vectors, fires and odors, to prevent blowing litter, and to discourage scavenging by animals, without presenting a threat to human health and the environment. Grading shall be accomplished to prevent ponding. At least a six inch thickness is required when earthen material is used as cover material. In all areas other than the working face which have not received waste material in any given operating day, the owner or operator shall take all steps necessary to ensure that the cover material remains functional and stable until such time as the final cover system is installed. Construction and demolition waste landfills shall maintain cover pursuant to the cover requirements contained within facility's approved facility management plan.

1.3 Facility Contacts

Main Office: Moretown Landfill, Inc. 19 Kaiser Drive Waterbury, VT 05676 (802) 244-1100 – voice (802) 244-5133 – fax
Operations Manager: William Kernan, Ops. Manager (802) 244-1100, ext. 227 (802) 279-1315 – cell
Corporate Office: 90 Ford Wade Road Ponte Verda, Florida 32081 (904) 737-7900
Community Hotline: (800) 981-4251
Emergency Numbers: Fire: 911 or (802) 496-3731 Police: 911 Hazardous Substance Spills: (800) 641-5005 Emergency Management Office: (800) 347-0488 Solid Waste Management Program: (802) 828-1138.

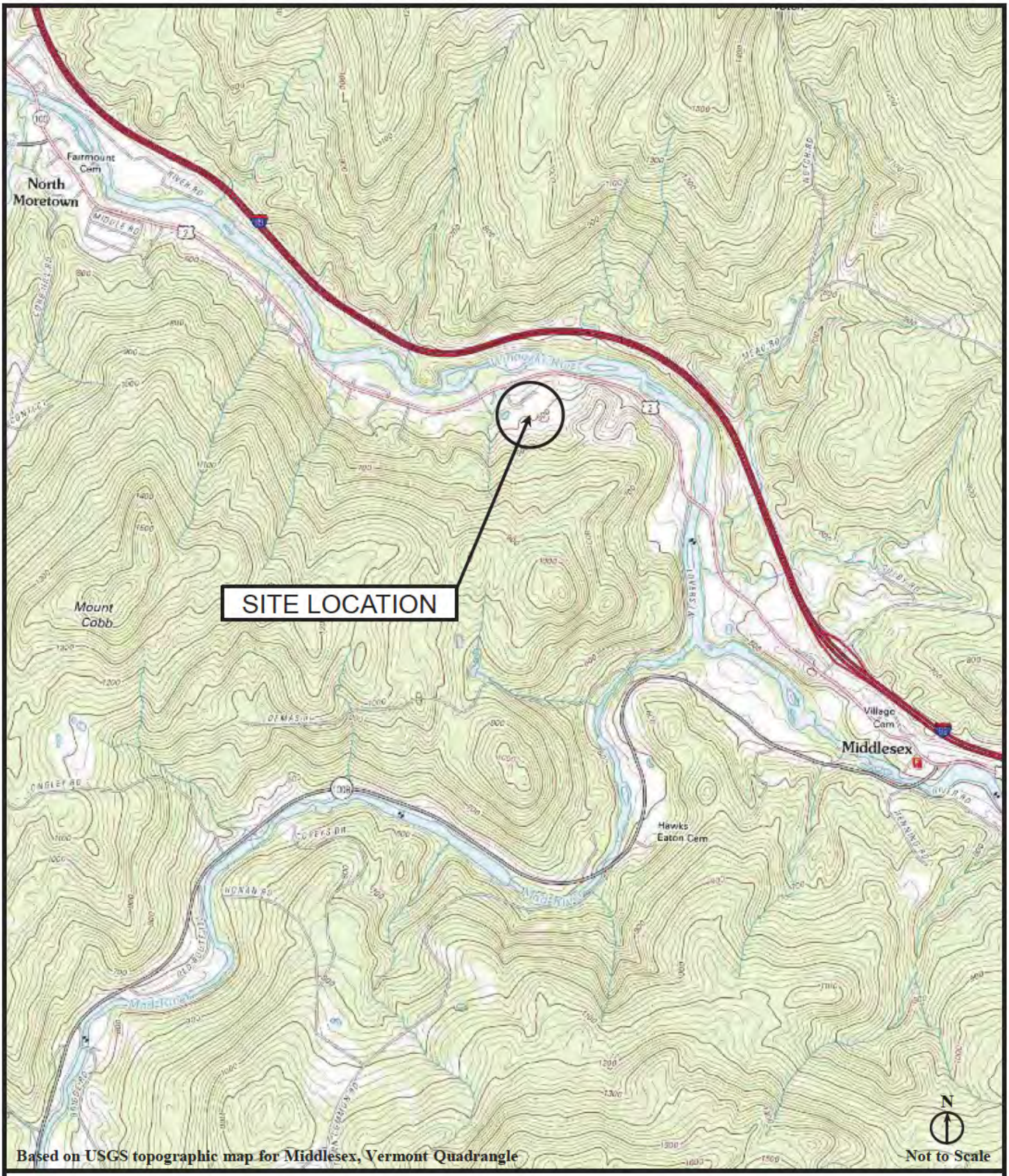

Figure 1-1.
Site Locus
Moretown Landfill, Inc.
Moretown, Vermont

TECH environmental

2.0 ODOR BASELINE AND ODOR AWARENESS

As landfill waste degrades and stabilizes, it creates smaller compounds from larger compounds and those smaller compounds are more volatile. Many of these compounds, especially those containing sulfur, are readily detectable by the human olfactory system – our noses. Landfill operations must be managed in a way that these compounds do not create nuisance conditions at the nearest neighbors.

Gases generated in a landfill consist mainly of methane and carbon dioxide. However, there are other trace gases generated. These trace gases only become an issue when they have a low odor detection threshold or are extremely persistent.

Before someone can understand potential changes in odor, the odor baseline must be fully understood. This section is included to help employees understand the basics of odor, how to continuously assess odor as part of their daily activities, and to understand the odor baseline and how odor varies.

The odor baseline will be observed by a designated MLI employee each work day during daily odor patrols and supported with quantitative, low-range H_2S sampling at the discretion of the employee based on odor presence. More information regarding baseline observations are detailed in the Odor Patrols section below.

2.1 Odor Primer

Sensitivity to odors varies among the population. An odor that is noticed by or is offensive to one person may not be noticed by or be offensive to another. It has been estimated that the olfactory sensitivity for 1 in 20 people is outside of what is considered the "normal" range and oftentimes individuals who have a poor sense of smell are never aware of their desensitized olfactory system. Conversely, some individuals have an extremely keen sense of smell. Factors that affect one's sensitivity to odors include genetics, age, gender, experience, and environmental influences.

Since odor detection and sensitivity can vary greatly among individuals, sensitivity screening can be conducted to determine whether someone is in the "normal" (average) range. Odor threshold screening should be conducted to determine whether those individuals who are formally charged with assessing the odor baseline and tracking its changes surveys possess an adequate olfactory threshold and are capable of conducting an accurate assessment of current odors. It can also be used to assess those individuals that are ideally suited to respond to odor complaints.

Four attributes of the sense of smell have been defined to classify odors:

- Concentration/Intensity - strength of the odor;
- Pervasiveness - change in intensity upon dilution;
- Character - description of the odor; and
- Hedonic Tone - relative pleasantness of the odor.

The concentration, or intensity, of an odor describes its strength; the intensity of an odor is unrelated to its character or pleasantness. In general, more reactive compounds have higher odor intensities. Odor concentration is typically highest at the source and disperses as it travels away from the source. However, odors from like sources can be additive. The pervasiveness of an odor is its rate of change in intensity upon dilution. The intensity of some odors will quickly diminish when released, while other odors will show very little decrease in concentration with dilution. The character of an odor best describes the source of that odor and typifies the human reaction to it.

The hedonic tone of an odor describes its relative pleasantness to the human nose. Two odors may both be very strong with similar odor intensities, but one may be pleasing to the human nose (i.e., flowers, chocolate, coffee) having a highly positive hedonic tone, while the other may be very offensive to the human nose (i.e., skunk, sewage, garbage) and have a highly negative hedonic tone. The character and hedonic tone of LFG are both considered negative and their degree of unpleasantness can contribute to community nuisance issues.

The remainder of this section of the Odor Plan is designed to establish methods to reduce the intensity, persistence, frequency, and duration of odor events.

2.2 Hydrogen Sulfide

The simplest reduced sulfur compound is "H_2S". H_2S is often used as a surrogate for total odor. It is an important indicator of decomposing wastes typically found in landfills and an excellent compound to track or trace odor control effectiveness. H_2S creates an unpleasant odor, often described as a "rotten egg" smell. It also has one of the lowest odor thresholds for any compound emitted from landfills.

Landfilled municipal solid waste has a mixture of compounds. Typically, the odorous compounds include reduced sulfur compounds with the simplest two being H_2S and methyl mercaptan, reduced nitrogen compounds including ammonia and triethylamine, and to a lesser extent reduced phosphorous compounds, VOCs, and fatty acids. Because H_2S is not the only potential odorant of concern from a landfill, this Odor Plan also includes periodic considerations of other reduced sulfur compounds to estimate odor nuisance potential.

Typically there are two distinctive odors at a landfill related to aerobic decay (fresh garbage odor) and anaerobic decay (reduced sulfur odor). The fresh garbage odor is not as persistent as the reduced sulfur odor, meaning if you have equal concentrations of each at the landfill, as they get diluted the less persistent one will fade away sooner to non-detectable levels.

H_2S and other reduced sulfur compounds' persistence, combined with unpleasant character and low odor detection thresholds, make up most of the odor potential from a landfill. If a monitoring program focuses on these compounds, most on-site odor concerns can be identified before they become off-site nuisances.

The two primary reduced sulfur compounds formed, as byproducts of landfill degradation, are the two simplest reduced sulfur compounds, H_2S and methyl mercaptan. These are often used as surrogates for examining the extent of landfill odor. In a laboratory, environment samples are analyzed for these two compounds and up to 20 reduced sulfur compounds in the part per billion

("ppb") level. Unfortunately, however, in the field we are limited to the sensitivity of the monitoring equipment available.

Most H_2S field detectors use electrochemical sensors that are sensitive to single digits in the parts per million by volume ("ppmv") range. Unfortunately, humans can detect H_2S down to single digit parts per billion by volume ("ppbv") range and mercaptans to the parts per trillion ("ppt") level. Although the threshold for odor nuisance is subject to great debate, the nuisance threshold for a single short-term event is below the single ppmv range of standard electrochemical sensors. Thus, a combination of the nose and other instruments are necessary.

2.3 Odor Nuisance Threshold

It is important for operators to realize that they may become desensitized to certain odors during the day and over time. An operator working on open wells likely will experience at least some amount of temporary olfactory fatigue. Thus, assessing off-site odor potential may not be as effective until after some time is spent away from the well field. It is not uncommon for someone from a facility that has been exposed to on-site odor to travel off-site to investigate an odor complaint and come to the conclusion that the odor is "not that bad."

Nuisance conditions are not defined by detectable odor, but are defined by odor that causes someone to change their daily behavior because of the odor. For example, if a person drives by a facility and smells a faint odor, it would not be considered a nuisance since it lasted for only a moment while the driver passed the facility. The odor did not change the driver's actions. However, if the odor was so intense that it caused a driver to turn around or to change future driving patterns to avoid it, the odor could be considered a nuisance.

In summary, an operator should always be aware of the odor baseline on-site as he completes his daily tasks. If this baseline changes, it should be noted. If it increases dramatically, the nuisance potential off-site will be explored by an employee that is not desensitized to the odor or the use of the third party odor responder. The employee / responder will evaluate the odor to the north of the landfill along Route 2, the MLI office, and other historic odor locations that are determined based upon wind direction and where odors are most likely to migrate. Odors will be documented in a Daily Odor Patrol Form and will be kept on site for record keeping. Once the odor source is confirmed, corrective actions (as detailed in this plan) will be conducted to resolve the odor issue.

2.4 Odor Training

It is possible to train someone to better understand their olfactory senses. To properly analyze an odor event, individuals need to understand the basics of odor, including how and what we actually smell when exposed to odorous compounds in the air. The goal of odor training is to provide individuals with the information that they need to better understand odor and how to recognize and characterize it. This, in turn, will help the trained individuals to better manage and respond to odor events and/or complaints. This type of training usually includes:

- Instruction on the role of personal perception;
- The differences between typical odors and each of their potentials; and

- The methods to recognize various odors.

Individuals responding to odor complaints or conducting odor patrols can more accurately determine the source of any one particular odor if they are well-informed about the scents of common odors and the way in which odors are released and transported to off-site locations. In some cases, odors initially believed to derive from a very proximate location are actually from other sources that are much further away or are a culmination of smaller sources that together produce a considerable odor. Many times, multiple sources may be adding to the total odor dynamic in a neighborhood, while the local community assumes that any and all odor is from a single source. A trained odor investigator is typically able to determine where an odor is coming from, and if not, at least correlate the odor to its rightful source.

Training will be conducted for landfill staff so that they can better understand odor, human perception, the differences between landfill odors and odor potential. This will help the landfill staff recognize and characterize odor increases more quickly, which will lead to a faster response. The training will include information on what causes odors, the role of personal perception, and recognizing odors. Staff will be trained in monitoring H_2S levels using a hand-held instrument, such as a Jerome analyzer, and how to pinpoint the source of odors by using the meter.

Since odor detection and sensitivity vary a great deal among individuals, staff will be screened for their odor sensitivity to confirm that the staff is in the "normal" range. It has been estimated that the olfactory sensitivity for 1 in 20 people is outside of what is considered a "normal" range. Staff members who are in the "normal" range will be considered qualified to receive the training.

2.5 Waste Acceptance & Odor Potential

Cell 3 is no longer accepting waste as of July 15, 2013. Thus, this section is no longer applicable.

2.6 Odor Patrols

As part of this Odor Plan, MLI will conduct an odor survey each business day until Cells 1 through 3 are permanently capped. Odor surveys shall be completed at a minimum frequency of once per week after the permanent capping system is in place, and personnel are no longer on-site daily. If after 60 consecutive days and no odor complaints have been confirmed, the odor patrols will be reduced to when personnel are on-site for post closure activities or after confirmed odor complaints. The daily odor surveys, over time, establish an "odor baseline" for the facility. This odor baseline will allow staff to more quickly recognize and respond to an incident of increased odor on-site in the future and likely before it becomes an off-site concern. Staff conducting the surveys will be trained in odor monitoring and odor identification, as described in more detail below.

The survey should be conducted in the morning, before the surveyor has become desensitized to odor. Monitoring in the morning is also beneficial from a meteorological perspective, since odors can experience less dispersion after a still and clear night. The on-site weather station is not operable and will be replaced. The weather station to be used is a Davis Instruments Model

6250 Vantage Vue Wireless Weather Station capable of gathering the data mentioned in this plan. This weather station will be installed at the site no later than August 2015.

The survey should be conducted along the perimeter of the landfill so that different wind directions and different areas can be examined. As the surveyor traverses the perimeter, he should record any notable odors on the Odor Patrol Log. Should the odor baseline be met, an employee will conduct an off-site patrol as if an odor complaint has been filed. A copy of the Odor Patrol Log template is included in Appendix A. This information will help establish the areas of the landfill that have a higher odor potential, based on both landfill activity and meteorological conditions.

The landfill should record the following information on days when odor patrols are completed:

- Wind speed and direction (from the landfill weather station);
- Weather observations (cloud cover, precipitation, haze, etc.);
- Barometric Pressure; and
- Landfill activity.

When odors are detected during the odor patrol, the following information should be recorded:

- Description of odor character and intensity;
- Measured value of H_2S (using a low range analyzer, such as a Jerome);
- Weather observations (cloud cover, precipitation, haze, etc.);
- Wind speed and direction (from the landfill weather station); and
- Any landfill activity occurring.

An off-site patrol will be completed upon confirmation of baseline odors on-site by the operator. An employee will evaluate off-site conditions as if there was an odor complaint at locations at least to the north of the landfill along Route 2, the MLI office, and other historic odor locations based on wind direction and where odors are most likely to migrate. Odors will be documented in the Odor Patrol Log and will be kept on site for record keeping.

The information from these daily surveys should be compiled to generate an odor baseline and to target areas of the landfill with greater odor potential. To that end, data from the Odor Patrol Log will be maintained in a database.

If odor and H_2S levels are found to dramatically exceed typical baseline conditions during the perimeter surveys, a systematic investigation for areas of excessive LFG emissions ("hotspots") of the landfill should be conducted. These surveys could be conducted over several days under different meteorological conditions to locate potential sources of odor. The survey should be conducted by systematically traversing the landfill. Once a hotspot is identified, an H_2S reading should be taken, preferably using an isolation chamber to avoid sample dilution from wind. If no hotspots can be identified, H_2S readings should be taken from regularly spaced intervals over the landfill.

Once a hotspot has been identified and characterized, a remediation strategy should be determined, depending on the hotspot and its proximity to the GCCS. Depending on the magnitude of the hotspot, sealing or inclusion in the GCCS should be considered.

It should be noted that the potential for hot spots will drop dramatically as areas are closed and permanently capped. That is why MLI prefers a "cap as you go" approach to cell operations. In the near future, Cells 1 through 3 will be covered with permanent capping. Once this occurs, the staff may determine that the odor baseline does not change much on a daily basis and the odor survey only need to be completed once a week. MLI will request to reduce frequency of odor patrols from SWMP as LFG production subsides with time. The key will be to maintain enough odor patrols so that any change in odor will be readily observed.

2.7 Surface Emission Monitoring

Although H_2S has a low odor threshold and methane is odorless, methane is typically present in LFG at a significantly higher concentration than H_2S. As such, the landfill is monitored for methane as a surrogate for LFG emissions. The landfill is currently monitored on a monthly basis. This monthly monitoring will continue until the Cell 3 permanent capping is in place. After the completion of final closure, the monthly monitoring will continue for a period of three months, and monthly thereafter until there are two continuous months without exceeding the 250 ppm threshold at the surface at which time MLI can request a reduced SEM frequency from SWMP.

MLI will perform surface emissions monitoring ("SEM") to quantify fugitive emissions on the landfill surface (which generally cause LFG odors) in accordance with MLI's Surface Emissions Monitoring Plan ("SEM Plan") dated August 2015, which is included in Appendix C on a monthly basis. SEM is performed by measuring the fugitive emission (methane) along a serpentine path and at cap/cover system penetrations as prescribed by the New Source Performance Standards ("NSPS"). The operational standard for "fugitive" methane based on the NSPS is 500 parts per million ("ppm") above the "background" concentration. However, MLI has established a Preventative Maintenance ("PM") Threshold of 250 ppm and will document and perform corrective action when SEM readings are at or above the PM threshold.

SEM monitoring will be performed using a flame ionization detector ("FID"). Prior to beginning SEM, the FID will be calibrated in accordance with the manufacturer's instructions. The background methane concentrations will then be determined by moving the sampling device's probe inlet to upwind and downwind locations at a minimum distance of at least 50 feet outside the landfill's limit of waste containment. The SEM monitoring will be performed by holding the FID probe inlet 5 to 10 centimeters (2 to 4 inches) from the ground surface. During the SEM monitoring event, the technician will observe the surface on either side of the monitoring routes, looking for areas of distressed vegetation, as well as cracks or seeps in the cover material. Methane concentrations will be measured at any area indicating distressed vegetation. Additionally, the SEM monitoring will include observing the integrity of any exposed capping system component.

The SEM data will be used to identify areas of the landfill where the GCCS needs to be adjusted, where additional cover material is needed, or where engineered improvements (such as a new LFG extraction well) are required. Any exceedance of the 250 ppm PM threshold will be

documented and the SEM data will be included in the current monthly SEM reports. Follow-up monitoring and corrective actions will be implemented in the timeline specified in the SEM Plan below. The SEM data will be kept either on site in a notebook or uploaded to a data management system for recordkeeping.

- Perform SEM in accordance with NSPS protocols documented in 40 C.F.R. §§ 60.755(c)(1) to 60.755(c)(4).
- Mark FID measurements that are above 250 ppm background levels (an exceedance) on the monitoring plan, and place a high-visibility field flag at exceedance location so location can be identified for future repairs by site personnel.
- Record brief description of exceedance area on the Daily SEM Log Sheet.
- Perform SEM during "typical meteorological conditions" per 40 C.F.R. § 60.755(c)(3).

Preventative Maintenance Threshold Actions:

During SEM monthly monitoring events, a methane concentration measurement in excess of the 250 ppm threshold will cause the technician to investigate the area immediately to determine the source of the emission. If a direct source of emissions is found, preventative maintenance will be discussed with the Landfill Operations Manager and appropriate action take and documented in the Landfill compliance log. Preventative maintenance actions may include but not be limited to:

- Additional soil placement;
- Repair of piping;
- Repair of the liner system;
- Replacement of worn clamps;
- Replacement of worn fittings;
- Use of temporary liner and ballast; and
- Temporary hook ups to passive vents or cleanouts.

Once corrective actions are complete the area will be re-monitored during the next monthly monitoring event and reported in the monthly and quarterly reports.

Actions Required by an Exceedance:

Any reading of 500 ppm or more above background at any location shall be recorded as a ***monitored exceedance*** and the actions specified in paragraphs (a) through (d) of this section shall be taken. As long as the specified actions are taken, the exceedance is not a violation of the operational requirements.

(a) The location of each monitored exceedance shall be marked and the location recorded.

(b) Cover maintenance or adjustments to the vacuum of the adjacent wells to increase the gas collection in the vicinity of each exceedance shall be made and the location shall be re-monitored within 10 calendar days of detecting the exceedance.

(c) If the re-monitoring of the location shows a second exceedance, additional corrective action shall be taken and the location shall be monitored again within 10 days of the second exceedance. If the re-monitoring shows a third exceedance for the same location, the action specified in paragraph (e) of this section shall be taken, and no further monitoring of that location is required until the action specified in paragraph (e) has been taken.

(d) Any location that initially showed an exceedance but has a methane concentration less than 500 ppm methane above background at the 10-day re-monitoring specified in paragraph (b) or (c) of this section shall be re-monitored 1 month from the initial exceedance. If the 1-month re-monitoring shows a concentration less than 500 ppm above background, no further monitoring of that location is required until the next quarterly monitoring period. If the 1-month re-monitoring shows an exceedance, the actions specified in paragraph (c) or (e) shall be taken.

(e) For any location where monitored methane concentration equals or exceeds 500 ppm above background three times within a monthly period, a new well or other collection device shall be installed within 120 calendar days of the initial exceedance. An alternative remedy to the exceedance, such as upgrading the blower, header pipes or control device, and a corresponding timeline for installation may be submitted to the Administrator for approval.

2.8 Odor Complaint Program

MLI has established a toll free hotline which operates 24-hours a day, 7 days a week, which all odor complaints are to be channeled. The toll free hotline number is 802-749-6266. When the hotline is disbanded, contact information for future odor complaints will be mailed to residents within a one mile radius of MLI. The hotline calls will be forwarded to a pager that will be manned by members of an odor complaint response team on behalf of MLI. MLI will continue to utilize a third party, approved by the SWMP, for conducting odor complaint investigations until the engineer has submitted the Cell 3 Certification of Closure and the odor hotline is discontinued as described in this plan. Thereafter, MLI may utilize MLI staff or a third party responder to complete any future investigations.

For each odor complaint call or email received, an Odor Complaint Response Form (see Appendix B) will be completed and the following procedure will be employed so that the complaint can be documented and addressed in a timely manner:

1. Information to be obtained from the caller, when available, will include name, address, telephone number, date, time and location of complaint. In addition, the nature of complaint should be recorded.

2. The odor response team member that receives the complaint will complete the Odor Complaint Response Form, which includes the above-mentioned information. The complaint will also be logged in an Odor Complaint Response Database created in Excel maintained by the odor responders. This spreadsheet will be accessible by the SWMP.

The database will include the following information: date, time, name of complainant, brief description of the nature of complaint, and weather conditions.

3. Upon receiving the complaint, the designated odor response team member will notify the Landfill Manager, and/or the Landfill Gas Technician, and the SWMP by telephone within 60 minutes.

4. If a complaint is received between 6 am and 8 pm seven days a week, an odor response team member will respond within 60 minutes. For calls received outside of 6 am to 8 pm, ML will respond by 10:00 am on the next business day.

5. The odor responder should identify the odor character, intensity, duration, and frequency. Odor intensity should be reported using the ASTM E544 Static-Scale Method to provide objective quantitative comparative odor intensity expressed in ppm of butanol in water. Word descriptors assigned to these concentrations are: no odor, very faint, faint, moderate, strong, and very strong. All members of the odor response team will be trained in this method to ensure accurate and consistent observations of odor.

6. The odor responder should document any off-site odors, including their location, strength, and character. The odor responder will attempt to identify the likely source of the odor based on current weather conditions and odor character.

7. At the conclusion of the investigation, the designated odor response team member will complete the response section of the Odor Complaint Response Form.

Members of MLI's odor response team will be trained in the above procedure.

The hotline may be eliminated within six months of final capping of Cell 3, assuming no confirmed complaints have been received. Upon request and approval by the SWMP, removal of the hotline will occur only after the effectiveness of the capping system on the odor issues has been proven as outlined in this plan. Following a consecutive six month period with no confirmed landfill odors, MLI may request from the State to discontinue the odor hotline. If the approval is granted, MLI will notify all landowners within a one mile radius that the hotline will cease and inform them that they may call a staffed phone line at the MLI/ADS offices or that they may contact the SWMP to file a formal complaint should an odor problem arise.

If an odor is determined to be attributed to the landfill, MLI should undertake corrective actions as necessary to address the cause of the odor.

3.0 LANDFILL GAS COLLECTION SYSTEM

This section presents the activities conducted by MLI to minimize odors related to the GCCS.

3.1 Gas Collection System Evaluations

LFG generated at MLI is extracted and destructed using a GCCS, which is maintained and operated to minimize fugitive emissions from the landfill that may cause odors. Changes in the gas system will change the odor baseline so proper balancing and general scanning for issue is paramount to minimizing odor.

MLI will continue to maintain the GCCS in the existing landfill areas. Additionally, MLI will complete SEM of the landfill cover system and LFG extraction well field, including monitoring of gas temperature, oxygen content, and well pressure regime. A copy of the SEM Plan is included in Appendix C.

Additionally, MLI also utilizes LFG/odor technicians to maintain, operate, and monitor the GCCS and identify potential odor sources. The LFG/odor technicians perform the following activities on a routine basis:

- Visual inspections of the LFGTE facility and primary flare will occur multiple times a week by MLI until final capping is placed. Nearly every workday PPL has someone on-site to examine the LFGTE facility.
- Maintenance of vertical LFG extraction wells, to include monitoring of liquid levels in the wells and maintaining pumps used to pump accumulated liquid from the well, where installed. During the past year this task was completed daily on a rotating basis to identify areas of concern. These areas of concern have been identified and wells have been either replaced, or improved to restore proper capture without significant liquid present. The monitoring now consists of a more typical weekly to monthly schedule. This procedure will continue until the cells are permanently capped and then the levels can be monitored on a less frequent basis.
- Monitoring of LFG composition and flow is currently performed monthly at each extraction point and adjustment of flow rates as needed to minimize air intrusion into the extraction system. This will continue until permanent capping and then the closed cells will shift to a quarterly schedule as recommended by EPA for closed landfills.
- SEM of the landfill cover system in accordance with the revised SEP Plan.
- LFG extraction well field tuning, including monitoring of gas temperature, oxygen content, and well pressure regime in done daily to weekly right now and will continue after permanent capping. Eventually, as LFG generation subsides, it will only need to be done quarterly.
- Cover integrity checks, consisting of observations for excessive erosion and/or lack of vegetation. With intermediate cover this is done daily. After the final cover is installed and vegetation has taken hold, this will be done less frequently as the timetable for other LFG related activities subsides.

MLI is in the process of modifying the existing well to allow a water level indicator to be inserted without removing the wellheads.

Gas well liquid levels will be monitored quarterly using this method. After each reading, a determination is made regarding whether the well must be pumped down or replaced. MLI intends to increase the number and depths of drilled wells to increase the overall effectiveness of the system. This, in combination with final capping to take place in the summer of 2016, will significantly dewater the overall waste mass without introducing additional components subject to high maintenance and failure modes. After completing the drilling program in the summer of 2015, MLI will assess the percentage of slotted pipe available at each individual well to ensure appropriate radius influence of effective gas collection. Wells with less than 50% slot available will be assessed as follows:

1. More than 50% of the perforated section of the well is submerged or silt has filled the bottom of the well or both (confirmed by sounding, bubble tube, snake camera, or a comparison to drill logs);
2. The difference in the available system pressure and static pressure is less than 3 inches of water column;
3. Determine if either:
    a. methane exceeds 55%; or
    b. low methane percentage and oxygen exceeds 5%.

If a well has good flow, can be adjusted to increase pressure to greater than 3" of water column, has methane in the 45% to 55% range, it should not be pumped even if it has less than 50% well screen capacity.

Wells will be a candidate for replacement under the following conditions:

1. If there are limited wells in the vicinity of the well to collect gas;
2. If after evaluation and pumping, the well does not return to the range specified above;
3. If the snake camera indicates that the well has a pinched or broken casing or is leaning too much to install a pump; or
4. If well records or snake camera indicate that the well has been raised multiple times and includes more than 50' of continuous solid pipe.

3.2 Condensate Checks

Visual inspections of the condensate knockout tanks, including the pumping systems and the flare skid, should be performed by MLI on a monthly basis. LFG/odor technicians should also perform systematic reviews of the GCCS on a routine basis, including but not limited to the following:

- Observations of the LFGTE facility and flare (visual inspections of the flare for the presence of a flame and either proper sparking from the igniter or the presence of the pilot light); Please note that PPL pushes excess gas to the flare and makes note if it is not operating in a "normal" mode.
- Observations of the active face;
- Review of LFG extraction points;
- Visual inspection for vegetation kills or other signs of LFG releases on and around the site

These activities are included in the operations and maintenance manual for the LFG and condensate management systems found in Appendix D.

3.3 Gas Well Monitoring and Balancing

The well field is balanced and monitored monthly by MLI to measure LFG concentrations (methane, oxygen, carbon dioxide, and balance gas), temperature, and pressure in the wellheads. LFG Extraction points will be tuned based on Methane quality, O2 and Flow to optimize gas collection. The technician will also record gas temperature. Elevated temperatures can be an indication of sub surface oxidation. Wells with temperatures over 130° F will be monitored for carbon monoxide in addition to the other gas parameters to rule out sub surface combustion.

Balancing of the GCCS may be used as a corrective action to reduce fugitive emissions that cause odors at the landfill. Additionally, PPL should also monitor for the above-mentioned LFG parameters at the flare, and provide the data to MLI. The well field data will be kept on site and uploaded to a data management system. This data will also be available to SWMP upon request.

In addition to the requirements mentioned above, the following information should be recorded by MLI during the monthly well field monitoring events and kept at the landfill:

- Name of technician;
- ID of each wellhead;
- Date/time of each reading;
- Velocity head (differential pressure);
- Wellhead system integrity and maintenance or repair requirements, including:
    - Valves operational
    - All monitoring devices/ports operational
    - All couplings tight
    - All hoses/pipes in good condition
- Vault/insulation in good condition;
- Evidence of animal burrows; and
- Other observations.

The LFG/odor technicians perform the following activities on a routine basis, i.e., on a daily to weekly basis:[1]

- Routine visual inspections of the LFGTE facility and/or flare(s);
- Maintenance of vertical LFG extraction wells, to include monitoring of liquid levels in the wells and pumping accumulated liquid from the well when necessary to improve LFG extraction; at least quarterly the liquid levels will be recorded and if the well has liquid

[1] After the permanent capping of Cell 3 is completed, the tasks that require daily frequency can be reduced to weekly and the weekly tasks to monthly. Once MLI demonstrates that the hydrogen sulfide average concentration drops consistently below 500 ppm for two consecutive months, these tasks are no longer needed for odor control. However, they may be necessary for landfill gas closure compliance and will be conducted at whatever frequency required for that program.

that is blocking 50% or more of the screen, the evaluation of the well will be performed as outlined in Section 3.1;

- Monitoring of LFG composition and flow from each extraction point and adjustment of flow rates as needed to minimize air intrusion into the extraction system;
- SEM of the landfill cover system as required by the Vermont Air Pollution Control Regulation 5-241;
- LFG extraction well field tuning, including monitoring of gas temperature, oxygen content, and applied vacuum;
- Monthly start-up of the utility flare and/or future enclosed flare, and checks on the blower equipment;
- Cover integrity checks, consisting of observations for excessive erosion and/or lack of vegetation as required by the Vermont Air Pollution Control Regulation 5-241; and
- Monitoring for conditions that may indicate the presence of a landfill fire.

3.4 Gas Well Maintenance

The GCCS includes vertical LFG extraction wells and horizontal LFG collectors strategically located to extract LFG generated from the waste mass. Each active gas extraction well will be equipped with a pre-fabricated wellhead consisting of a flow measuring device, flow control valve, temperature probe, and sampling ports. Occasionally, based on the vertical extraction well location and waste mass surrounding the well, leachate will accumulate in the well to levels that effect LFG extraction. Indicators of significant leachate impacts include a lack of vacuum at the well head, reduced LFG flows, or changes in LFG composition. See Appendix D for more specific setpoints.

If these indicators are observed by MLI, then the vertical extraction well will be evaluated based on location, age, well construction, and effectiveness and a conclusion will be reached to either install a pump to lower leachate levels in the well, or to abandon it and install a new well. This will occur throughout the life of the landfill to maintain the proper level of odor control.

If a pump is installed, then the leachate will either be pumped into a leachate collection system cleanout, the condensate forcemain, the leachate tank, or into a GCCS header pipe, pending the proximity of infrastructure to the vertical extraction well. If after the pump has been installed leachate infiltration into the vertical extraction well exceeds the maximum pumping rate and continues to be problematic, then the well will be re-evaluated based on operating cost, LFG flow rates, the location of the well within the landfill, and odor control as to whether the well is abandoned or replaced.

Horizontal collectors that show signs of collapse, watering out, pinching, or low gas flow will be replaced or abandoned after an investigation to confirm that they are not functioning adequately.

3.5 Flare Maintenance

With respect to flare maintenance, the LFG technicians perform the following activities, described in more detail in Appendix D, on a routine basis:

- Monthly start-up of back-up flare and checks on the blower equipment. This task will remain as a monthly start-up requirement, even after the landfill is permanently capped.
- Checking the operational status of the blower/flare system including blower/flare control panel status, and observations related to blower/flare maintenance needs.
- Testing the blower/flare controls to confirm the automatic feature functions, such as automatic restart, auto shut-down valve, auto ignition, etc. and provide routine O&M visits associated with regular blower/flare maintenance as recommended by the blower/flare manufacturer.
- Checking and making observations on LFG extraction system performance including conducting regular measurements of LFG composition (methane, carbon dioxide, oxygen, and balance gas) and system vacuum at the main header inlet to the blower/flare system.
- Conducting regular monitoring and adjustment of gas extraction wells including measurement of LFG composition (methane, carbon dioxide, oxygen, and balance gas), well vacuum, LFG flow, and LFG temperature at each wellhead.
- Providing other routine maintenance of gas collection wells including activities such as replacement of sample ports, replacement of damaged well hoses, raising of PVC well risers, and other scheduled routine maintenance tasks which can be accomplished during routine site visits.

Non-routine scheduled maintenance consists of corrective repair or maintenance work, typically identified during prior routine site visits, and additional site visits. This work could include items such as resetting of pipe supports, repair of broken header valves, installation and repair of lateral lines, equipment overhauls, flame arrestor/demister cleaning, condensate draining, blower bearing greasing, system diagnostics, etc.

Non-routine unscheduled emergency services include events that require immediate response; these could include, but not be limited to:

- Emergency call-out by operating personnel;
- Repair of main header line breaks (resulting in no gas flow to the blower/flare station);
- Odor complaints;
- Loss of flare ignition;
- Significantly reduced flow rate; and
- Surging vacuum.

3.6 Preventative Maintenance

On a routine basis, the LFG technicians should perform cover integrity checks on the landfill cover system. Per NSPS regulations (60.755(c)(5)), facilities are to visually monitor cover integrity on a monthly basis. Although the MLI landfill is not an NSPS facility, these procedures should be followed at least until the permanent cap is in place. The cover integrity check consists of a systematic observation to assess conditions such as erosion, landfill surface cracks or holes, distressed vegetation, bare spots in the landfill cover system, visual indications of LFG emissions, and leachate breakouts or seeps. When issues are identified, MLI staff should take the following corrective actions as necessary:

- Placement of additional soil;
- Placement of agricultural Lime;
- Repair of gas piping;
- Repair of the cap geomembrane/cover system;
- Replacement of worn kanaflex hoses and clamps;
- Replacement of worn fittings;
- Use of temporary liner (i.e. geomembrane) and ballast;
- Temporary connection of the GCCS to passive vents or cleanouts;
- Installing pumps in wells to remove condensate and increase extraction of LFG; or
- Installation of horizontal collectors or vertical wells.

The LFG technicians should also monitor the performance of the intermediate cover through examination of leachate production records and by observations made during the monthly (minimum frequency) cover integrity checks.

3.7 Pump Maintenance

MLI should review the pumping equipment on a regular basis to determine that it is properly working and to maintain records of the amount of leachate collected. See Appendix D for more information on the pump maintenance.

4.0 MONITORING & RECORD KEEPING

This section presents the environmental monitoring activities conducted at the landfill to minimize odors.

4.1 Landfill Liner Monitoring

Monitoring will continue to be performed during the post-closure period to monitor performance of the landfill liner system. Monitoring will include collection of surface and groundwater samples from specified locations, and collection and analysis of groundwater samples from specified water supply sources surrounding the facility. In addition, leachate generated at the landfill will also be monitored for characterization prior to disposal. The groundwater and surface water sampling locations included in the facility environmental network are depicted in the Environmental Monitoring Location Plan found in Appendix E. Lastly, LFG concentrations are monitored routinely at various site locations.

4.2 H_2S Monitoring

The landfill monitors the concentration of H_2S on at least a weekly basis at the inlet to the LFGTE plant initially. Gas samples are collected in Tedlar bags and hydrogen sulfide readings are taken with Drager tubes directly from the bag. Additionally, H_2S readings are done with a gas analyzer equipped with an H_2S chemical sensor.

H_2S levels are currently being reduced to meet air permitting requirements. An activated carbon rental unit was installed in October 2013. The unit is located after the header systems and before the blower and before the combustion units. The system is designed to reduce sulfur dioxide emissions by adsorbing H_2S on to activated carbon prior to combustion.

Some form of H2S removal system will be used until the H2S level drops to consistently below 250 ppm or possibly slightly higher if the LFG flow drops substantially. The current carbon system was installed as a temporary system. It is a heavy duty system that could remain for as long as necessary, however a long-term cost evaluation will be completed in 2015 to determine the optimal “permanent” system. H2S data will be measured upstream and downstream of the H2S unit at least weekly as long as the H2S system is operable. This data will be kept in the facility operating record and submitted to ANR upon request.

As H_2S concentrations come down naturally from the older cells and any newer cells apply waste mixing to minimize odor, it will be possible to eliminate the H_2S pretreatment system as outlined in this section.

4.3 Stormwater Management Evaluations

Stormwater at the landfill is managed so that it is diverted away from disposal areas. This minimizes the creation of leachate and allows the water to be managed as stormwater. Finished slopes are graded, seeded and mulched to promote vegetative growth as soon as possible. The vegetation holds the soils and minimizes erosion of the landfill areas. The landfill staff inspects all vegetated areas routinely and maintenance is performed so that the vegetation continues to prevent erosion.

The landfill is required to regularly collect grab samples of stormwater during a rain event and assess key visual indicators of stormwater pollution which includes odor. If the discharge has a noticeable odor, for instance if it smells like gasoline fumes, rotten eggs, raw sewage, solvents, or has a sour smell, this could be indicative of pollutants in the discharge. The findings of these assessments are used to trigger further facility inspections and corrective action to modify problems found at the site.

4.4 Leachate Management Plans

The landfill is inspected on an almost daily basis for the seepage of leachate from within the waste to the slope face as other landfill activities occur. If there is evidence of leachate leaving the lined area of the landfill, a suitably sized trench should be excavated in the area of the seepage and backfilled with clean stone to cut off the seepage and direct it to the liner system.

Measures used to minimize leachate production include snow removal and sloping properly covered refuse in inactive portions of the landfill so that some or all of the runoff is diverted as uncontaminated stormwater to the perimeter stormwater management system.

MLI is constantly monitoring for seeps. MLI should conduct a systematic seep monitoring activity on a weekly-to-monthly basis after the permanent capping is complete. In the event of a side slope seep, MLI should investigate the cause of the breakout. If no such cause can be determined, a suitably sized stone filled cut-off trench will be constructed of necessary length to contain and eliminate the seep.

4.5 Record Keeping

The frequency of reporting will be outlined in the Post-Closure Certification issued to MLI by ANR.

The contents of these reports and submittal methods are summarized below.

1. The LFG Monitoring Report documents the following monitoring information:
   - The location of any penetration or grid point that exceeded the 250 ppm threshold.
   - Any corrective action taken as a result of the exceedance.
   - Mapped LFG collection and control system monitoring results for the reporting month including:
     - Maximum LFG temperature at each extraction location;
     - Maximum oxygen concentration at each extraction location; and
     - Maximum static pressure at each extraction location;
   - SEM results for the reporting month including:
     - The location of any penetration or grid point that exceeded the 250 ppm PM threshold;
     - Any corrective action taken as a result of the exceedance; and
     - A map of the SEM results that exceed 500 ppm.
   - A summary table containing the methane concentrations monitored in each of the on-site structures and the perimeter landfill property gas probes;

- Summary of Odor Complaints, responses, SWMP notification documents, and copies of the Odor Complaint Response Forms with confirmed off-site odors (See Section 2.8); and
- Site plans including the locations of the gas extraction monitoring points and SEM serpentine path/grid monitoring points.

4.6 Emergency Reporting

Any discharge or emission from the facility which poses a threat to public health and safety, a threat to the environment, or the creation of a nuisance, must be reported within 24 hours to the Secretary, the local Health Officer, and Select Board of the affected municipality. A written report should also be submitted to the same parties within 7 days, identifying the discharge or emission that occurred, the type, quantity and quality of waste, and the actions taken to correct the problem.

5.0 SPECIFIC ODOR CONTROL PROCEDURES

This section presents a number of specific odor control procedures conducted by MLI to minimize odors at the landfill.

5.1 Odor Control for Breeching the Cap

There is a significant odor potential from any waste or leachate that breaches the cap. The primary goal is to eliminate the breech as soon as possible. If possible, neighboring property owners should be contacted so they understand that there may be a temporary increase in odor. If the breech cannot be addressed within one business week and the odor potential is drastically increased, MLI will operate a fogging machine with a counteractant or masking agent to alter the hedonic tone (relative pleasantness) of the odor, weather permitting. Over a short period of time, pine scent could be used to mix with the odor to mask the odor character.

5.2 Odor Control for Excavating into Waste

Excavating waste activities should be very limited for the closed cells and especially after the permanent cap is in-place, however, if a need arises to excavated waste to repair seepage, replace wells, etc., the effect on the odor baseline should be monitored closely. Daily odor patrols should occur while waste is being excavated.

If unexpected odors are encountered, the most appropriate course of action will be determined based on the location of the odor. During the initial excavation, particular attention will be given to determining if there are excessive odors during the excavation operation themselves. If odors do occur during excavation, contingencies would include:

- Grading the cut slope to 3:1 H:V and covering with earthen material;
- Limiting the amount of open trench to between 50’ – 100’;
- Use of alternative clean daily cover such as Posi-Shell; and
- Limiting excavations to periods of favorable (dry windy) atmospheric conditions.

If odors are encountered during placement of the material, contingencies would include limiting the amount of stockpiled material to the amount that can be used immediately.

If these odor control contingency plans are not sufficient, additional contingencies, such as use of chemical odor control agents could also be used, subject to further evaluation of effectiveness.

5.3 Odor Control for Clean Out or Wellhead Replacements Procedures

Clean out or replacement procedures should be scheduled when meteorological conditions are not still and not drifting towards the west (where residential properties are located). If possible, neighboring property owners should be contacted so they understand that there may be a temporary increase in odor. In addition, the landfill should consider operating a fogging machine with a counteractant or masking agent to alter the hedonic tone (relative pleasantness) of the odor, weather permitting. Over a short period of time, pine scent could be used to mix with the odor to mask the objectionable odors.

5.4 Odor Control for Replacing Wells

No holes or trenches should be left uncovered or open overnight. In addition, any waste and soil materials excavated from either a vertical well or trench should be disposed of in the operating section of the site and covered on a daily basis, or appropriately stockpiled and covered for disposal offsite. Removal of excavated waste from the drilling area should be a continuous process, such that when the well installation is complete all the excavated waste has been removed and appropriately disposed of or stockpiled.

6.0 LONG-TERM FINANCIAL COMMITMENT TO ODOR CONTROL

MLI is committed to controlling odors at the landfill. Part of that commitment is providing the necessary financial resources, as set forth in the following chart:

Post Closure Financial Commitment to Odor Control Moretown Landfill, Inc.				
DESCRIPTION	**QUANTITY**	**UNITS**	**UNIT COST ($)**	**TOTAL COST ($)**
Groundwater Well Monitoring	88	EA	$816.00	$71,808.00
Groundwater Well Maintenance	1	EA	$1,080.00	$1,080.00
Surface Water Monitoring Point(s)	20	EA	$510.00	$10,200.00
Underdrain Discharge Monitoring Point(s)	4	EA	$816.00	$3,264.00
Leachate Monitoring and Analysis	1	LS	$9,600.00	$9,600.00
Leachate Disposal	1	LS	$29,000.00	$29,000.00
Leachate System Maintenance	1	LS	$2,150.00	$2,150.00
Engineering Inspections	1	EA	$1,800.00	$1,800.00
Mowing	36	AC	$120.00	$4,320.00
Grassing/Landscaping	36	AC	$25.00	$900.00
Access Road Maintenance	100	LF	$42.00	$4,200.00
Slope Failure/Final Cap Repair	1	LS	$30,000.00	$30,000.00
Sediment Basin Cleanout	3	EA	$2,550.00	$7,650.00
Stormwater Ditch Maintenance/Repair	200	LF	$10.20	$2,040.00
Stormwater Structure Maintenance/Repair	2	EA	$2,550.00	$5,100.00
Fencing	200	LF	$28.50	$5,700.00
Gate(s)	1	EA	$1,200.00	$1,200.00
Sign(s)	5	EA	$50.00	$250.00
Independent Construction Manager	1	LS	$2,600.00	$2,600.00
Administration	1	LS	$8,000.00	$8,000.00
LFG System Maintenance/Odor Control				
Flare Maintenance	1	LS	$10,000.00	$10,000.00
Header and Lateral Maintenance	1	LS	$30,000.00	$30,000.00
NSPS Compliance	1	LS	$10,000.00	$10,000.00
Odor Complaint Response Hotline Budget	1	LS	$5,000.00	$5,000.00
Pump Maintenance	1	LS	$5,000.00	$5,000.00
Pump Replacement	1	LS	$5,000.00	$5,000.00
Gas Well Maintenance	1	LS	$5,000.00	$5,000.00
Gas Well Replacement	1	LS	$10,000.00	$10,000.00
Condensate Sampling & Analysis	1	LS	$250.00	$250.00
Third Party Inspections	1	LS	$2,500.00	$2,500.00
Utilities	1	LS	$3,000.00	$3,000.00
ANNUAL POST-CLOSURE COST ESTIMATE				**$286,612.00**
TOTAL POST-CLOSURE COST (30yr)				**$8,598,360.00**

APPENDIX A

ODOR PATROL LOG

Only trained investigators should fill out this form.

MORETOWN LANDFILL ODOR PATROL LOG

Date: _____

Investigator's Name: _____ **Starting Time:** _____

Your best estimate of current weather conditions:	**Weather conditions from the on-site weather station:**
Wind Direction (wind coming from the): N NE E SE S SW W NW	Condition: _____
Average Wind Speed: None/Still Calm Low (5-10 mph) High (10+ mph)	Temp (°F): _____ Pressure (in.): _____
Weather: Clear Skies Partly Cloudy Cloudy Light Rain Heavy Rain Snow	Wind from the: _____ Wind speed (mph): _____

Jerome 631X Hydrogen Sulfide Sampling Results:

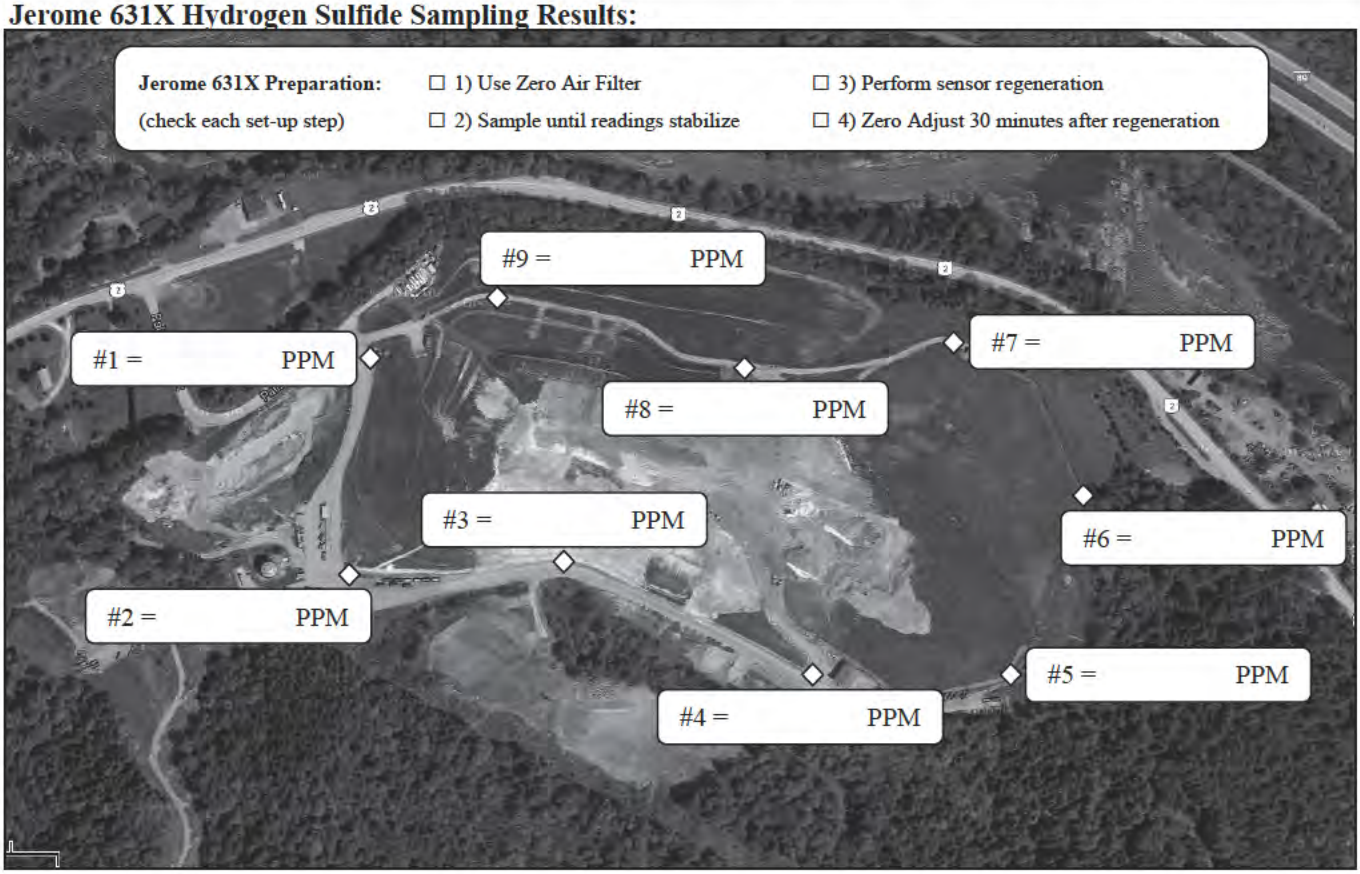

Circle your answers to the questions below:

Did you notice any odor? *Yes* *No* Highest measured H_2S level: _____ *PPM*

How strong was the odor? *Trace* *Noticeable* *Moderate* *Strong* *Very strong*

What did it smell like? *Gas (propane/methane)* *Garbage* *Diesel truck* *Rotten eggs* *Other*_____

Where do you think the odor came from? *Unsure* *Compost* *Landfill*

Was the Jerome 631X calibrated before use: Yes No Was the User's Manual Followed: Yes No

Off-site odor investigation: Yes No Notes:_____

REMEMBER TO DOCUMENT ALL READINGS FROM THE ODOR PATROL IN THE ELECTRONIC DATABASE

APPENDIX B

ODOR COMPLAINT RESPONSE FORM

Odor Response No.: _____

APPENDIX B

Moretown Landfill, Inc. - Odor Complaint Response Log

1) Identification of Complaint:

Date: _____ Time of call: _____

Caller Name: _____ Address: _____

Phone Number: _____ Email: _____ Send Copy Log- ☐

Location of Complaint: _____

Time of Odor: _____ Duration of Odor: _____ Impacted: Inside/Outside/Both

Description of Odor: _____

Weather: _____ Temp.: _____ Humidity: _____ Wind Speed/Direction: _____

Complaint received by: _____ Response Required: _____

2) Nature of Complaint:

Odors: ☐

Other: ☐ Description: _____

3) Complaint Investigation: Responder: _____

Date: _____ Time: _____ Contact Person:

Observed Weather: _____ Temp.: _____ Humidity: _____ Wind Speed/Direction: _____

Weather Station Data: _____

Odor Type/Strength based on field investigation compared to butanol standard.

Location of Complaint: _____	Odor Type	Landfill Gas	Leachate	Trash	Sludge	Compost	Other:
	Odor Strength	no odor	very faint	faint	moderate	strong	very strong
Landfill Property: _____	Odor Type	Landfill Gas	Leachate	Trash	Sludge	Compost	Other:
	Odor Strength	no odor	very faint	faint	moderate	strong	very strong
Other: _____	Odor Type	Landfill Gas	Leachate	Trash	Sludge	Compost	Other:
	Odor Strength	no odor	very faint	faint	moderate	strong	very strong
Other: _____	Odor Type	Landfill Gas	Leachate	Trash	Sludge	Compost	Other:
	Odor Strength	no odor	very faint	faint	moderate	strong	very strong

Findings:

_____

_____

_____

_____

4) Response to Odor Complaint (Follow-up / Recommendations)

_____

_____

_____

_____

_____

APPENDIX C

SUFACE EMISSIONS MONITORING PLAN

SURFACE EMISSIONS MONITORING PLAN

MORETOWN LANDFILL

Moretown, Vermont

Prepared for Moretown Landfill, Inc.
August 2015

TABLE OF CONTENTS

1.0 INTRODUCTION 1

2.0 MONITORING PLAN RATIONALE 1

3.0 SURFACE EMISSION MONITORING PROCEDURES 2

4.0 ACTIONS REQUIRED BY AN EXCEEDANCE 3

5.0 REPORTING 4

6.0 PREVENTATIVE MAINTENANCE 4

7.0 SEM AND REPORTING SCHEDULE SUMMARY 5

FIGURES

Figure 1 –SEM Sampling Grid Plan

1.0 INTRODUCTION

The Vermont Department of Environmental Conservation (VTDEC), has requested that the Moretown landfill operated by Moretown Landfill, Inc. (MLI), located in Moretown, Vermont, develop a Surface Emissions Monitoring Plan (SEM Plan) detailing procedures for monitoring surface emissions (i.e. landfill gas [LFG]) from the landfill, and the landfill gas collection and control system (GCCS). The landfill currently uses a third party consultant (Consultant) to administer the SEM Plan, including performing the surface scans and completing the necessary reporting.

MLI is currently not required to monitor the GCCS and cover integrity of the landfill in accordance with 40 Code of Federal Regulations (C.F.R.) Part 60 Subpart WWW (the New Source Performance Standards [NSPS] for Municipal Solid Waste [MSW] landfills), and 40 C.F.R. Part 63, Subpart AAAA (the National Emission Standard for Hazardous Air Pollutants [NESHAPs] for MSW landfills), but this SEM Plan has been prepared based on the requirements of these regulations. Currently, surface emissions monitoring (SEM) at the landfill is performed by measuring the fugitive emissions (methane) along a serpentine path and at cap/cover system penetrations as prescribed by the NSPS. Although, the operational standard for “fugitive” methane based on the NSPS is 500 parts per million (ppm) above the “background” concentration, MLI is currently (2013) reporting fugitive emissions greater than or equal to 50 ppm to the VTDEC. The 50 ppm threshold was implemented by MLI as a response level to proactively reduce potential odor issues that may result from fugitive emissions through the landfill’s cover system. Going forward, MLI will document and perform corrective measures when SEM readings indicate a PM threshold of 250 ppm or an exceedance of a 500 ppm methane threshold.

This SEM Plan presents the required SEM procedures to check for fugitive emissions that can be used as verification that the GCCS is functioning properly. A narrative describing the monitoring schedule and procedures along with the reporting requirements is included below. This SEM Plan also provides information on monitoring point locations, steps that will be followed in the event of an exceedance, and reporting methods and techniques for confirming the landfill's final cover integrity.

2.0 MONITORING PLAN RATIONALE

The SEM Plan will be implemented to document that the GCCS is operating properly, and that methane concentrations at ground level within the landfill’s limit of waste containment (LOW) are below the threshold of 250 ppm. Therefore, the Preventative Maintenance in this SEM Plan is based on a fugitive emission concentration of 250 ppm within the landfill’s LOW and 500 ppm for an exceedance.

In addition to performing SEM, the Consultant will perform cover integrity checks which include an inspection of the cover soil for slumps, seeps, distressed vegetation, etc. Observed cover issues will be repaired as soon as possible by MLI personnel or an authorized

contractor. The Consultant will also monitor all above-grade (exposed) piping, wellheads, leachate cleanout risers, and structures within the permitted LOW.

The landfill is composed of one (1) distinct disposal area consisting of four (4) disposal cells: the Capped Unlined Landfill (closed); Cell 1 (closed); Cell 2 (90% Closed); and Cell 3. The permitted final topography for the disposal area is generally at a slope of 3 horizontal to 1 vertical. MLI is currently seeking regulatory approvals to place permanent capping on Cell 3.

The SEM routes are based on a serpentine path with monitoring locations spaced approximately 15-meters (50 ft) apart. Cap and cover system penetrations such as wells and piping, or visually- observed slumps, seeps, cracks, or distressed vegetation on slopes will be monitored for fugitive emissions during the initial monthly SEM event and during each follow-up monitoring event. The SEM data will be included in the Monthly LFG Monitoring Reports (See Section 5.0). Refer to attached Figure 1, the SEM Sampling Grid Plan for monitoring route locations at the landfill.

3.0 SURFACE EMISSION MONITORING PROCEDURES

SEM monitoring will be performed using a flame ionization detector (FID). Prior to beginning SEM, the Consultant will calibrate the FID in accordance with the manufacturer's instructions. After the FID has been calibrated, the Consultant will determine the background methane concentrations by moving the sampling device's probe inlet to upwind and downwind locations at a minimum distance of at least 50 feet outside the LOW.

At a minimum, MLI will instruct the Consultant to perform monthly SEM of the landfill using an FID at the following locations:

- Along a predetermined serpentine path/grid (see Figure 1);
- At each of the cap/cover system penetrations;
- At each of the locations where fugitive emissions were encountered during prior monitoring events as described in Section 4.0 below;
- At each location that indicated cap integrity issues (seeps, rills, distressed vegetation, etc.); and
- Methane concentrations will be measured at any area indicating distressed vegetation, and the results shall be recorded.

The Consultant will conduct SEM by holding the FID probe inlet 5 to 10 centimeters (2 to 4 inches) from the ground surface. During the SEM event, the Technician will observe the surface on either side of the monitoring routes, looking for areas of distressed vegetation, as well as cracks or seeps in the cover material. Methane concentrations will be measured at any

area indicating distressed vegetation, and the results shall be recorded. Additionally, the Consultant will observe the integrity of any exposed capping system component.

Any exceedance of the 250 ppm PM threshold will be documented, and the SEM data will be included in the Monthly SEM reports. The SEM reporting requirements are described in Section 5.0.

In the event that inclement weather (rain or snow) prevents the Consultant from performing monitoring activities, the monitoring event will be performed as soon as weather conditions permit.

4.0 ACTIONS REQUIRED BY AN EXCEEDANCE

In the event a methane concentration measurement exceeds a concentration of 500 ppm above the established background, the location shall be tracked and reported. To correct an exceedance, the following procedures shall be completed:

a. The location of each monitored exceedance shall be marked and the location recorded.

b. Cover maintenance or adjustments to the vacuum of the adjacent wells to increase the gas collection in the vicinity of each exceedance shall be made and the location shall be re-monitored within 10 calendar days of detecting the exceedance.

c. If the re-monitoring of the location shows a second exceedance, additional corrective action shall be taken and the location shall be monitored again within 10 days of the second exceedance. If the re-monitoring shows a third exceedance for the same location, the action specified in paragraph (e) of this section shall be taken, and no further monitoring of that location is required until the action specified in paragraph (e) has been taken.

d. Any location that initially showed an exceedance but has a methane concentration less than 500 ppm methane above background at the 10-day re-monitoring specified in paragraph (b) or (c) of this section shall be re-monitored 1 month from the initial exceedance. If the 1-month re-monitoring shows a concentration less than 500 ppm above background, no further monitoring of that location is required until the next quarterly monitoring period. If the 1-month re-monitoring shows an exceedance, the actions specified in paragraph (c) or (e) shall be taken.

e. For any location where monitored methane concentration equals or exceeds 500 ppm above background three times within a monthly period, a new well or other collection device shall be installed within 120 calendar days of the initial exceedance. An alternative remedy to the exceedance, such as upgrading the

blower, header pipes or control device, and a corresponding timeline for installation may be submitted to the Administrator for approval.

5.0 REPORTING

MLI will provide LFG monitoring reports on a monthly basis to theVTDEC. The contents of these reports and submittal methods are summarized below.

1. Monthly LFG Monitoring Report: The Monthly LFG Monitoring Report documents the following SEM information:

   - The level, location and ID of any penetration or grid point that exceeded the 250 ppm PM threshold or the 500 ppm exceedance threshold; and
   - A summary of corrective actions taken as a result of the exceedance.

Additionally, a map of the SEM results will be prepared by the Consultant on a monthly basis. The monthly report will include the SEM methane concentration results that exceed 250 ppm and 500 ppm at each of the locations indicated above.

6.0 PREVENTATIVE MAINTENANCE

Primary Preventative Maintenance activities will consist of MLI's staff inspecting the disposal areas final and intermediate cover for failures (slumps, seeps, distressed vegetation, etc.). Necessary repairs shall be completed as soon as practical, and recorded in the monitoring logs. The locations of the failures shall be re-inspected within 30 calendar days of detecting the failure and making the necessary repairs.

Preventative maintenance actions may include, but are not necessarily limited to:

- Placement of additional soil;
- Placement of Agricultural Lime;
- Repair of gas piping;
- Repair of the cap geomembrane/cover system;
- Replacement of worn kanaflex hoses and clamps;
- Replacement of worn fittings;
- Use of temporary liner (i.e. geomembrane) and ballast;
- Temporary connection of the GCCS to passive vents or cleanouts;
- Installing pumps in wells to remove condensate and increase extraction of LFG;

- Installation of horizontal collectors or vertical wells; or
- Replacement of damaged LFG wellheads.

In addition to the previous preventative maintenance options, gas wells will be monitored to ensure they are operating as designed. Preventative maintenance of a well with inadequate radius of influence is outlined below. This information will be available to SWMP upon request.

MLI will assess the percentage of slotted pipe available at each individual well to ensure appropriate radius of influence of effective gas system. Wells with less than 50% slot available will be assessed as follows:

1. More than 50% of the perforated section of the well is submerged or silt has filled the bottom of the well or both (confirmed by sounding, bubble tube, snake camera, or a comparison to drill logs);

2. The difference in the available system pressure and static pressure is less than 3 inches of water column;

3. Determine if either:

    a. methane exceeds 55%; or
    b. low methane percentage and oxygen exceeds 5%.

If a well has good flow, can be adjusted to increase pressure to greater than 3” of water column, has methane in the 45% to 55% range, it should not be pumped even if it has less than 50% well screen capacity.

Wells will be a candidate for replacement under the following condition:

1. If there are limited wells in the vicinity of the well to collect gas;

2. If after evaluation and pumping the well does not return to the range specified above;

2. If the snake camera indicated that the well has a pinched or broken casing or is leaning too much to install a pump; or

3. If well records or snake camera indicate that the well has been raised multiple times and includes more than 50’ of continuous solid pipe.

7.0 SEM AND REPORTING SCHEDULE SUMMARY

The following is a schedule of the SEM and reporting requirements for the MLI:

1. SEM of Penetrations and Serpentine Path: At least monthly with follow-up monitoring.

2. Preventative Maintenance: Perform as indicated by SEM monitoring.

3. SEM Reports**:** Monthly reports shall be submitted to the VTDEC.

FIGURE 1

NSPS SEM SAMPLING GRID PLAN

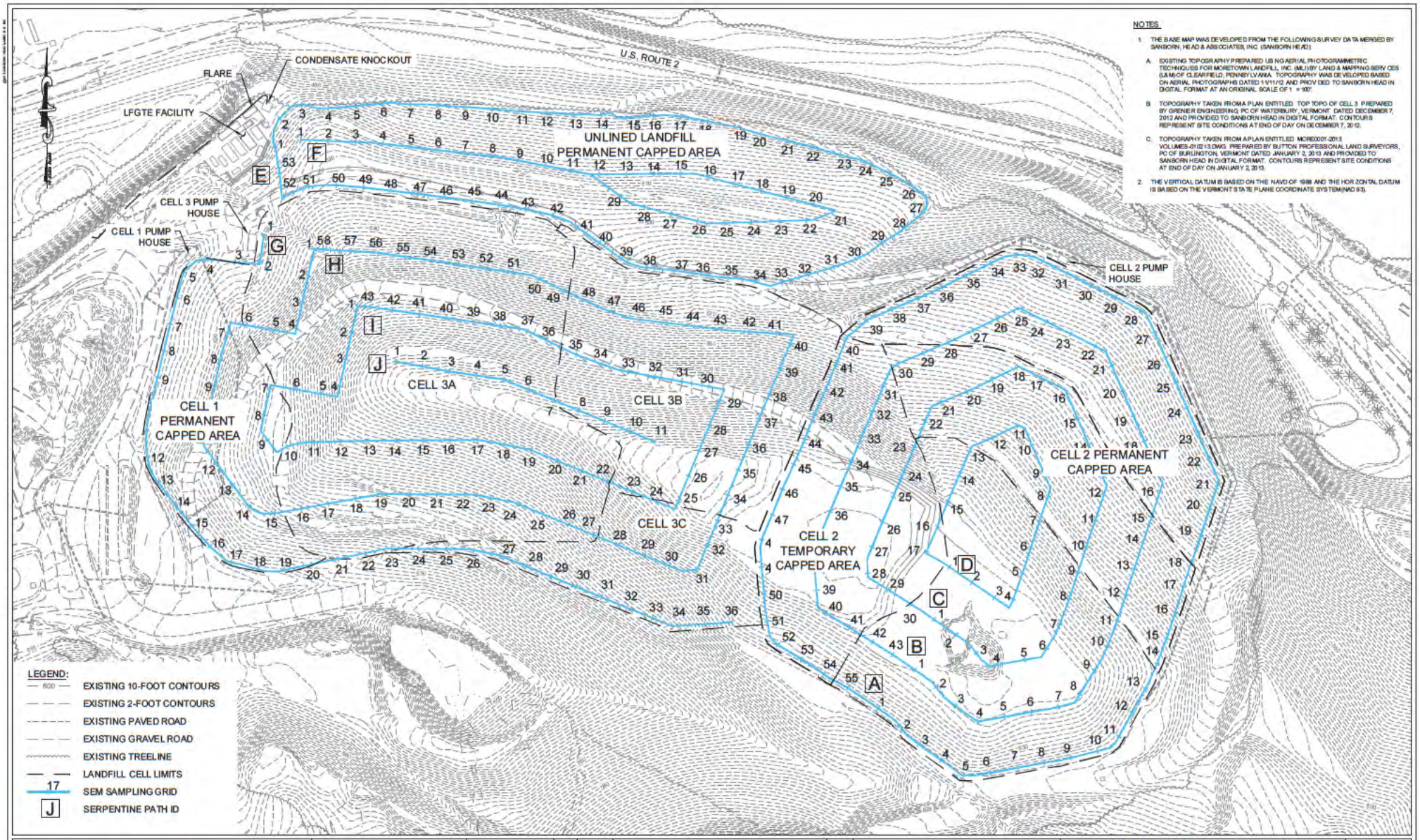

NOTES:

1. THE BASE MAP WAS DEVELOPED FROM THE FOLLOWING SURVEY DATA MERGED BY SANBORN, HEAD & ASSOCIATES, INC. (SANBORN HEAD):
   A. EXISTING TOPOGRAPHY PREPARED USING AERIAL PHOTOGRAMMETRIC TECHNIQUES FOR MORETOWN LANDFILL, INC. (MLI) BY LAND & MAPPING SERVICES (LAMI) OF CLEARFIELD, PENNSYLVANIA. TOPOGRAPHY WAS DEVELOPED BASED ON AERIAL PHOTOGRAPHS DATED 11/11/12 AND PROVIDED TO SANBORN HEAD IN DIGITAL FORMAT AT AN ORIGINAL SCALE OF 1" = 100'.
   B. TOPOGRAPHY TAKEN FROM A PLAN ENTITLED "TOP TOPO OF CELL 3" PREPARED BY GRENIER ENGINEERING, PC OF WATERBURY, VERMONT DATED DECEMBER 7, 2012 AND PROVIDED TO SANBORN HEAD IN DIGITAL FORMAT. CONTOURS REPRESENT SITE CONDITIONS AT END OF DAY ON DECEMBER 7, 2012.
   C. TOPOGRAPHY TAKEN FROM A PLAN ENTITLED "MORE0001-2013 VOLUMES-010213.DWG" PREPARED BY BUTTON PROFESSIONAL LAND SURVEYORS, PC OF BURLINGTON, VERMONT DATED JANUARY 2, 2013 AND PROVIDED TO SANBORN HEAD IN DIGITAL FORMAT. CONTOURS REPRESENT SITE CONDITIONS AT END OF DAY ON JANUARY 2, 2013.
2. THE VERTICAL DATUM IS BASED ON THE NAVD OF 1988 AND THE HORIZONTAL DATUM IS BASED ON THE VERMONT STATE PLANE COORDINATE SYSTEM (NAD 83).

SANBORN HEAD

GRAPHICAL SCALE
80 0 0 80 160

NO	DATE	DESCRIPTION	B

DRAWN BY C. RIVET/M. HILDENBRAND
DESIGNED BY C. RIVET
REVIEWED BY J. HANEY
PROJECT MGR J. HANEY
PIC D. ADAMS
DATE FEBRUARY 2013

MORETOWN LANDFILL, INC.
MORETOWN LANDFILL
MORETOWN, VERMONT

SEM SAMPLING GRID PLAN

PROJECT NUMBER: 3040.03

FIGURE NUMBER: 1

APPENDIX D

O&M MANUAL FOR LFG AND CONDENSATE MANAGEMENT SYSTEMS

MORETOWN LANDFILL, INC.

LANDFILL GAS COLLECTION, CONTROL AND CONDENSATE MANAGEMENT SYSTEMS

STANDARD OPERATING PROCEDURES

Prepared for

Moretown Landfill, Inc.
19 Kaiser Drive
Waterbury, VT 05676

REV. October 2, 2015

TABLE OF CONTENTS

1 REVISION HISTORY 1-1

2 INTRODUCTION 2-1

3 GENERAL INFORMATION 3-1

3.1 GCCS DISCUSSION 3-1
3.1.1 Landfill Gas Overview 3-1
3.1.2 Landfill Gas Collection and Control System 3-2
3.2 HEALTH AND SAFETY 3-2
3.3 GCCS CONTACTS 3-2

4 GCCS OPERATING LIMITS 4-1

4.1 GCCS OPERATING LIMITS 4-1
4.2 ENERGY FACILITY AND FLARES 4-1
4.2.1 Utility Flare 4-1
4.3 APPLIED VACUUM AT CONTROL DEVICES 4-2

5 GCCS MONITORING EQUIPMENT 5-1

5.1 WELLFIELD MONITORING 5-1
5.1.1 Calibrating the Analyzer 5-2
5.2 LIQUID LEVEL MEASUREMENT EQUIPMENT SPECIFICATIONS 5-3
5.3 SURFACE EMISSIONS MONITORING EQUIPMENT 5-4

6 GCCS MONITORING AND OPERATION 6-1

6.1 COMBUSTION PLANT OPERATION 6-1
6.1.1 Vacuum Set-Point 6-1
6.1.2 System Shutdown 6-1
6.2 GCCS MONITORING EVENTS 6-1
6.2.1 Flow Rates 6-1
6.2.2 Wellfield Monitoring Schedule and Tuning Frequency 6-2
6.2.3 Initial Wellhead Measurements 6-3
6.2.4 Adjusted Wellhead Measurements 6-4
6.3 LIQUID LEVEL MEASUREMENT 6-4
6.3.1 Measurement Frequency 6-4
6.3.2 Liquid Measurement Procedure 6-4
6.4 SURFACE EMISSIONS MONITORING PROCEDURES 6-4
6.4.1 Surface Emissions Monitoring 6-4
6.4.2 SEM Weather Conditions 6-5

7 DATA MANAGEMENT AND REPORTING 7-1

7.1 WELLFIELD DATA MANAGEMENT 7-1
7.1.1 Electronic Data (If applicable) 7-1
7.1.2 Reporting Procedures 7-1
7.1.3 Monthly Wellfield Reports 7-2
7.2 LIQUID LEVEL DATA MANAGEMENT 7-2
7.3 SEM REPORT 7-3

8 GCCS INSPECTION AND MAINTENANCE 8-1
8.1 COMPONENT INTEGRITY CHECKS 8-1
8.2 WELLHEAD INSPECTION AND MAINTENANCE 8-1
8.2.1 Inspect and Maintain 8-1
8.2.2 Document and Repair 8-1
8.2.3 Inspection Frequency 8-1
8.2.4 Joints 8-2
8.2.5 Valves 8-2
8.2.6 Sample Ports 8-2
8.2.7 Flex Hose 8-2
8.3 PUMP INSPECTION AND MAINTENANCE 8-3
8.4 WELL AND SURROUNDING AREA INSPECTION AND MAINTENANCE 8-3
8.4.1 Well Casing 8-3
8.4.2 Surrounding Area 8-4
8.4.3 Report Findings 8-4
8.5 FLARE INSPECTION AND MAINTENANCE 8-4
8.5.1 System Operation 8-4
8.5.2 Blower Bearing Temperature 8-4
8.5.3 Blower / Motor 8-5
8.5.4 Belts (Belt Drive units, Where Applicable) 8-5
8.5.5 Flexible Couplers (Direct Drive Units, Where Applicable) 8-5
8.5.6 Blower / Motor Safety Devices 8-5
8.6 CONTROL DEVICE INSPECTION AND MAINTENANCE 8-6
8.6.1 System Operation 8-6
8.6.2 Control Panel 8-6
8.6.3 Flame Arrestor 8-7
8.6.4 Thermocouples 8-7
8.6.5 Valves 8-7
8.6.6 Pilot System 8-7
8.6.7 Flow Meter 8-7
8.7 SPARE PARTS 8-8
8.7.1 Control System 8-8
8.7.2 Collection System 8-8
8.8 CONDENSATE MANAGEMENT SYSTEM INSPECTION AND MAINTENANCE 8-9
8.8.1 Condensate Overview 8-9
8.8.2 Condensate Management System 8-9
8.8.3 Monitoring Requirements 8-10
8.8.3.1 Condensate Pump Stations 8-10
8.8.3.2 Knock – Out Pot (KOP) 8-10
8.8.3.3 KOP Demister PAD 8-10
8.8.3.4 Exercise All Valves 8-11
8.8.4 Maintenance Requirements 8-11
8.8.5 Condensate Sampling & Analysis 8-11
8.8.6 Record Keeping & Reporting 8-12
8.9 CONTINUOUS MONITORING EQUIPMENT INSPECTION AND MAINTENANCE 8-13
8.9.1 Combustible Gas Monitoring System 8-13
8.10 MAIN COLLECTION PIPING INSPECTION AND MAINTENANCE 8-14
8.10.1 Sample Points 8-14
8.10.2 Valves 8-14
8.10.3 Access Points 8-14

9 SUBSURFACE OXIDATION (SSO-POTENTIAL LANDFILL FIRES) 9-1

9.1.1 Symptoms 9-1
9.1.2 Notifications 9-1
9.1.3 Initial Investigation 9-1
9.1.4 Data Analysis 9-3
9.1.5 Removing the Oxygen from the Fire 9-3
9.1.6 Things to Avoid 9-4
9.1.7 Continued Monitoring 9-4
9.1.8 Timeline 9-5

10 HYDROGEN SULFIDE 10-1

10.1 H_2S SAMPLING STANDARD OPERATING PROCEDURE 10-2
10.1.1 Equipment List 10-2
10.1.2 Monitoring Strategy 10-2

11 GREENHOUSE GAS REPORTING RULE 1

STANDARD OPERATING PROCEDURE ACKNOWLEDGMENT FORM

APPENDICES

APPENDIX A EQUIPMENT SPECIFICATION FORMS

APPENDIX B ANALYZER CALIBRATION FORMS

APPENDIX C SURFACE EMISSIONS MONITORING FORMS

APPENDIX D STARTUP, SHUTDOWN, MALFUNCTION FORM

APPENDIX E WELL ASSESSMENT AND CONDITION REPORT FORM

APPENDIX F FLARE FORMS

APPENDIX G LIQUID LEVEL MEASUREMENT FORM

APPENDIX H COVER INTEGRITY FORM

APPENDIX I VIRIDIAN PUMP MAINTENANCE FORM

APPENDIX J GCCS MAINTENANCE CALENDAR

APPENDIX K HYDROGEN SULFIDE FORM

APPENDIX L GREENHOUSE GAS WEEKLY FORM

1 REVISION HISTORY

Add the effective date of the most-recent revision to the list below. Do not overwrite or delete any dates. This is intended to be a complete record of all revisions made to this Landfill Gas ("LFG") Collection, Control and Condensate Management Systems Standard Operating Procedures ("SOP").

Date of Initial Issuance
November 15, 2013
Revision Dates
June 11, 2015
August 14, 2015
October 2, 2015

2 INTRODUCTION

This document presents the SOP and minimum operation and maintenance ("O&M") efforts required of those parties responsible for performing Gas Collection and Control System ("GCCS") and condensate management services for Moretown Landfill, Inc. ("MLI") at its landfill in Moretown, Vermont ("Facility"). The location of the landfill is shown in Figure 2-1.

Specifically, this document describes the procedures and minimum requirements for:

- Monitoring, inspection, and maintenance of LFG collection system components;
- Monitoring, inspection, and maintenance of LFG control devices;
- Monitoring, inspection, and maintenance of condensate systems; and
- Data management.

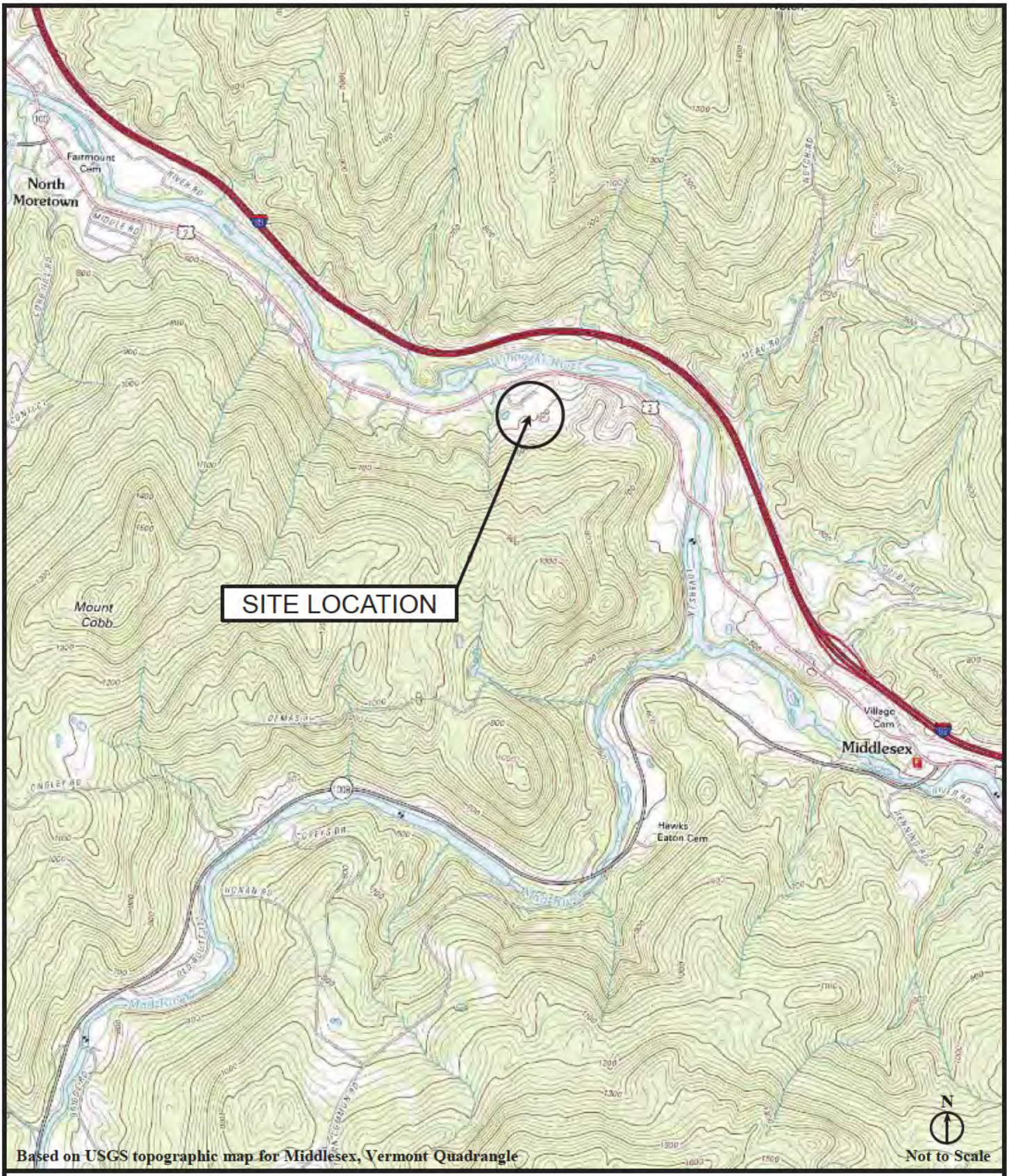

Figure 2-1.
Site Locus
Moretown Landfill, Inc.
Moretown, Vermont

TECH environmental

3 GENERAL INFORMATION

3.1 GCCS Discussion

The landfill has an LFG gas to energy ("LFGTE") facility, which is currently operated by PPL Renewable Energy ("PPL"). The LFGTE facility consists of two existing Caterpillar G3520C LE LFG-fired internal combustion engine generators. Any excess LFG collected and not combusted in the engines, as well as generated during periods of the engines may be off-line, is combusted by an on-site flare.

The purpose of this section is to provide a summary of available information regarding current LFG management conditions at the landfill, and to provide an outline of the strategy and actions being taken to manage LFG emissions generated by the historic landfilling of waste. This section addresses management of LFG at the landfill up to and including and treatment technologies of LFG.

3.1.1 Landfill Gas Overview

Landfills produce gas as organic materials decompose under anaerobic conditions. Anaerobic conditions occur when oxygen present in the voids of refuse placed at a landfill is consumed by aerobes (micro-organisms which consume air to grow), leaving an environment that is free of oxygen. The LFG generation rate is affected by many factors including refuse composition, the waste age and quantity, condition of the waste mass, moisture content, pH, temperature, and maintenance of an anaerobic environment. Solid waste landfills are capable of generating LFG for many years, with sources such as the United States Environmental Protections Agency ("EPA") citing a 20 to 30 year or longer life for generation of LFG.

LFG contains approximately equal parts of methane and carbon dioxide by volume. Other gases such as volatile organic compounds and hydrogen sulfide may also be present in LFG in trace concentrations. Methane is a colorless, odorless gas that is explosive in concentrations ranging from 5% to 15% in air. At concentrations above 15% methane is flammable. LFG has its own characteristic odor due to the presence of trace compounds. Some of the more significant odor causing classes of trace constitutes include ethers, phenols, organic acids, solvents and sulfur compounds.

Once generated, LFG will move through refuse and solid waste in a landfill disposal area site by both convection and diffusion. Convection is the movement of gas from an area of higher pressure to an area of lower pressure. Diffusion is the movement of gas from an area of higher concentrations to an area of lower concentrations. The emission and

migration of LFG may potentially have adverse effects on the environment including fire and explosion, health risk, odor nuisance, vegetative distress, and groundwater contamination.

3.1.2 Landfill Gas Collection and Control System

LFG generated at the landfill is extracted and destructed using a GCCS. The GCCS is maintained and operated to minimize fugitive emissions from the landfill that may cause LFG odors.

3.2 Health and Safety

All parties must comply with MLI's Health and Safety requirements. Please refer MLI's Health and Safety Plan ("HASP").

3.3 GCCS Contacts

The following are the contact names and numbers for MLI:

Name/Title	Office Phone Number	Cell Phone Number
William Kernan, Ops. Manager	(802) 244-1100 x227	(802) 279-1315

4 GCCS OPERATING LIMITS

4.1 GCCS Operating Limits

MLI has established the following operating limits for the GCCS, which are identical to the new source performance standard ("NSPS") limits:

Wellhead Parameter	Limit
Methane (%)	N/A
Oxygen (%)	up to 5%
Applied Vacuum (in. W.C.)	up to <0 in. W.C.
Gas Temperature (deg F)	up to 131 deg F

4.2 Energy Facility and Flares

Currently an LFGTE facility (which consists of two Caterpillar G3520C LE LFG fired internal combustion engines) and a utility flare are the primary methods for destroying LFG at MLI. The LFGTE facility and engines at the landfill are owned, operated, and maintained by PPL. PPL may seek a permit for a third engine for the LFGTE facility. MLI retains ownership and maintenance responsibilities for the GCCS, and the existing utility flare.

The existing utility flare is generally operated simultaneously with the LFGTE facility to combust excess LFG not used by the engines. Any excess LFG collected and not combusted in the engines, as well as generated during periods when the engines may be off-line, is combusted by the utility flare. A hydrogen sulfide removal system is installed to control the emissions of sulfur dioxide which is created with the combustion of hydrogen sulfide entrained in LFG.

4.2.1 Utility Flare

The utility flare assembly consists of the flame arrestor near the base of the flare, vertical piping to the flame cup, spark sources mounted to the vertical piping, spark leads, spark

plugs, a thermocouple, and guy wires. The system is started with a manually operated propane pilot. The flame arrestor prevents the flame from traveling back through the system in the event of a pressure loss. The vertical piping transmits the gas to the flame cup.

The open flare assembly is monitored on a monthly basis for the following parameters:

- General conditions;
- Condition of ignitor system;
- Nitrogen supply for control valves;
- Propane supply for ignition system; and
- Back pressure at flame arrestor.

4.3 Applied Vacuum at Control Devices

The pressure of the LFG will vary throughout the system at any given time, and will also vary with varying extraction rates. The pressures at the extraction points should be negative (vacuum) to provide active extraction from that point. If the pressure is positive, adjustments should be made to increase the flow rate provided the gas constituent concentrations are within the normal ranges as discussed above.

The vacuum set-point is an important part of maintaining the overall "health" of the wellfield. Vacuum should be maintained as low as possible while ensuring acceptable negative pressure is available to the furthest points of the collection system.

1. Provide GCCS extraction consistency – The vacuum needs to be maintained consistently so balancing and tuning events are consistent.
2. Prevent excessive air from entering the landfill – Over-pulling on a well can cause damage to the anaerobic bacterial populations. It may also cause subsurface oxidation (“SSO”).
3. Prevent under-pulling on wells – Under-pulling on wells does not allow the GCCS to capture all the gas being generated by the landfill. Under-pulling can result in surface emissions, odors, and off-site gas migration.
4. Minimize electricity use related to generating vacuum – Blowers use a significant amount of electricity. Reducing vacuum to minimum acceptable level minimizes electricity use and reduces electrical surges which may shutdown the control devices.

5 GCCS MONITORING EQUIPMENT

It is important to have a complete and accurate set of data collected from the field. The accuracy and dependability of the monitoring equipment used in the field is key to providing O&M Personnel with reliable results on which to base tuning decisions.

5.1 Wellfield Monitoring

MLI will utilize a LANDTEC GEM2NAV Gas Analyzer (Analyzer) (Refer to Appendix A for equipment specifications) or equivalent to monitor the wellfield at MLI. The monitoring equipment should be set up as follows:

- Confirm monitoring point designations. Each monitoring location should have a site-specific ID, and that the ID is unique to that monitoring point and is consistent with site's GCCS Drawings, and configured in the monitoring device to accurately calculate well flows by recognizing the type and size of wellhead, and the flow measuring device. Alternative wellhead configurations may be used with approval of MLI.

- Compile all site-specific monitoring location ID's into a single ID Set.

- Use ID set for all work related to that site.

- If a monitoring point is replaced (redrilled), establish a new ID for the replacement point after the old ID to indicate redrilled/replaced. Do not re-use the exact old ID for the replaced point.

- When creating a new well in the Analyzer, it must be GPS marked.

- Suggested comments for valve adjustments are as follows:
    - No Change
    - Opened Valve ¼ turn, ½ turn, 1 turn, etc.
    - Valve Fully Opened
    - Closed Valve ¼ turn, ½ turn, 1 turn, etc.
    - Valve Fully closed
    - Second reading

- Suggested comments for operational issues are as follows:
    - Surging in Header
    - Bad Sample Ports
    - Valve needs replacement/repair
    - Flex hose needs replacement/repair
    - Header vacuum loss
    - Well bore seal needs replacement/repair
    - Well needs to be raised/lowered

5.1.1 Calibrating the Analyzer

The monitoring equipment should be calibrated several times during the day of wellfield monitoring. Use the following steps for field calibration:

1. Inspect in-line filters (water trap and/or carbon filter) for moisture, fine particles, or breakthrough. Replace the filters if deemed necessary.

2. Inspect the integrity of the sampling apparatus:
    a. Sample tubing (Tygon® or equivalent) should seal tight onto the hose barbs.
    b. Note condition of the tubing. Replace the tubing if dirt or moisture has accumulated.
    c. Note sample fitting O-ring(s) condition. Replace the O-rings if deemed necessary.

3. Perform field calibrations per manufacturer's specifications. Refer to Users Manual for instructions to calibrate the Analyzer.

4. Field calibrate the meter:
    a. Calibrate a minimum of daily during monitoring events, and
    b. If extreme temperature changes and/or atmospheric changes occur during the monitoring event, perform additional calibrations as necessary.

5. Perform additional field calibrations if the following circumstances occur:
    a. Extreme ambient air temperature changes (plus or minus 20 degrees F).
    b. Significant increase or decrease in atmospheric pressures.
    c. Unable to stabilize gas quality.
    d. Erroneous measurements on meter screen (i.e. <<>>).
    e. Gas qualities totaling more than 100% volume.
    f. Methane concentrations higher than 70% by volume.
    g. Oxygen concentrations in ambient air less than 19% or greater than 21% by volume.
    h. Balance gas concentrations in ambient air greater than 81 % by volume.
    i. Balance gas to oxygen ratio is **less** than 4:1 in any gas sample.
        i. This ratio is based on the fact that ambient air is comprised of approximately 80% nitrogen and 20% oxygen (a 4:1 ratio). Since balance gas usually represents mostly nitrogen, and is inert, and cannot be consumed by landfill bacteria, it is theoretically impossible to have a ratio less than 4:1 unless something in the landfill is producing oxygen or consuming nitrogen.
            a. Example: a gas sample from a wellhead indicates 6% balance gas and 2% oxygen. This sample shows a 3:1 ratio indicating that the internal sensors may need to be recalibrated.

b. Ratios greater than 4:1 are possible and may indicate a subsurface situation that needs to be immediately addressed. (Example: a gas sample shows balance gas is 25% and oxygen is 0.5% - a 50:1 ratio). The example presented indicates that something in the landfill is consuming the oxygen that should be present (8%) and the remainder is balance gas (nitrogen). This example could occur if a subsurface oxidation (SSO) event is taking place within the waste mass - the SSO is consuming the oxygen and the inert nitrogen remains, thus showing a 50:1 ratio.

6. Complete the calibration forms located in Appendix B.

7. Ensure the date and times on the Analyzer are accurate before starting the monitoring event.

8. Use the appropriate calibration gas for the monitoring event – 50% Methane / 35% Carbon Dioxide / 4% Oxygen, or similar, for monitoring the GCCS.

9. Zero the meter pressure sensors (transducers) during each calibration event.
   a. Minimize the impact of wind by cupping hoses in the palm of the hand (Do not block hose ends).
   b. Calibrate pressure sensors and record results on the calibration form.
   c. Zero sensors before each wellhead reading if sensors read anything other than 0.00 when disconnected from the wellhead and are not impacted by wind.

5.2 Liquid Level Measurement Equipment Specifications

MLI is in the process of modifying the existing well to allow a water level indicator to be inserted without removing the wellheads.

5.3 Surface Emissions Monitoring Equipment

For Surface emission monitoring ("SEM"), MLI will use a Flame Ionization Detector ("FID") (Trimble SiteFID™ or equivalent) meeting the requirements of 40 C.F.R. Part 60 Appendix A, Method 21. A Photo Ionization Detector ("PID") **cannot** be used for SEM.

MLI should calibrate the meter daily prior to each monitoring event according to requirements of 40 C.F.R. Part 60 Appendix A, Method 21. Calibration consists of a three-part procedure:

- Instrument calibration to methane standard;
- Equipment response time test; and
- Calibration precision test.

In addition, the calibration should also include the following:

- Determine ambient air background levels prior to performing SEM; and
- Must be able to GPS while performing SEM (exceptions will be made only when there is equipment failure).

Refer to Appendix C for calibration forms.

6 GCCS MONITORING AND OPERATION

6.1 Combustion Plant Operation

6.1.1 Vacuum Set-Point

The engine plant is operated by PPL and excess LFG not used in the plant is sent to the flare. The engine plant blower will be operated and maintained to provide a consistent vacuum on the wellfield. MLI should make the necessary adjustments to the wellfield and the blower to maintain the set-point during and after wellfield monitoring and tuning. MLI should also document all adjustments and periodically verify that the vacuum at the combustion plant is being adjusted appropriately to maintain the set-point.

6.1.2 System Shutdown

If the engines are down for four hours or more, the PPL operator will notify immediately MLI. MLI's GCCS operator should start the flare back-up blower and adjust vacuum to set-point. MLI should continue to monitor the wellfield once vacuum has stabilized from the back-up blower.

6.2 GCCS Monitoring Events

Valid wellfield data is critical to maintaining compliance and is essential to making accurate tuning decisions. Without accurate data, improper tuning adjustments can occur leading to odor and migration issues and potentially long term damage to the gas producing bacteria population.

The gas extraction flow rates will be different at each extraction point and will vary with changes in atmospheric pressure as well as landfill cover condition (i.e., geomembrane cap or intermediate cover). Likewise, the cumulative extraction rate at the blower(s) will vary with time. The flow rates should be adjusted based on the concentrations of the various constituents as described above. As the operating record of the system becomes established over time, "normal" flow ranges for the individual extraction points as well as the system will become established.

6.2.1 Flow Rates

There are three types of wells to be monitored. The first are perimeter gas probes and are not included in the well tuning.

Perimeter Gas Probes

LFG should be monitored with a combustible gas meter. The presence of combustible gas shall not exceed 25% of the lower explosive limit ("LEL") in the LFGTE structures, and shall not exceed the LEL for methane at the property boundary. In the event that the LEL is exceeded at the property boundary, MLI should immediately take steps necessary to protect human health.

Horizontal Collection Trenches

The horizontal collection trenches typically consist of perforated, HDPE pipe installed in trenches excavated in the refuse. The lateral collection trenches are connected to LFG transmission piping. The extraction of LFG from the lateral collection trenches is controlled at a wellhead.

Landfill Gas Extraction Wells

LFG extraction wells, constructed of 8-inch diameter schedule 80 PVC pipe, have been installed in boreholes drilled with a 30-inch diameter (typical) bucket auger to various depths within the refuse. Typically, the wells are slotted from depths of approximately 15 feet below intermediate cover grades to the base of the well (which are drilled to depths within approximately 15 feet of the landfill base liner). The slotted sections of the wells are backfilled with crushed stone.

6.2.2 Wellfield Monitoring Schedule and Tuning Frequency

The adjustment or "tuning" of the LFG extraction system involves monitoring various parameters and making adjustments to optimize the extraction of LFG from each extraction point in the system. The objective of the tuning is to provide for a negative pressure at each extraction point without causing the intrusion of air into the landfill. Tuning is an iterative process, as adjustments to any portion of the system have the potential to affect the entire system. A discussion of the monitoring and tuning procedures is provided below.

The ultimate goals of balancing and tuning a wellfield are to: 1) maintain the wellfield in compliance with federal, state and local regulations; 2) maintain compliance with the facility's permit; 3) control odors; and 4) control lateral migration and fugitive surface emissions of LFG. The following balancing and tuning protocols have been developed to achieve these goals. MLI is currently not subject to the monitoring, recordkeeping, and reporting requirements of NSPS. Even though MLI is a non-NSPS site, MLI will implement the following:

- Monitor and tune the wellfield at least once per month.
- Before beginning of the monitoring and tuning event, verify that the collection system is operating at under normal conditions (e.g., confirm that conditions such

as blower maintenance are not occurring or are not scheduled to occur during the tuning event). If the system is not operating under normal conditions, then reschedule the monitoring event.

6.2.3 Initial Wellhead Measurements

The following steps are for existing monitoring points. Any new monitoring point needs to follow the new wellfield procedures.

- Make no wellhead adjustments during the initial reading. Save one full line of data and note in the comments section what action will be completed prior to adjusting the wellhead and taking the adjusted reading.

- Acquire valid wellhead measurements.
    - Select appropriate well ID on meter.
    - With the sample train and pressure sensor hoses disconnected, activate the meter's internal sample pump so that the entire sample train is purged and the results are indicative of ambient air (approximately 20% to 21% oxygen and 79% to 80% balance gas).
    - Perform transducer zero function to ambient air conditions. Be sure to minimize wind effects during the procedure by shielding the hose ends (Do not block hose ends.).
    - Check wellhead sample fittings for cracks, bad o-rings and blockage by liquid, ice, spider webs or other substances.
    - Record temperature by inserting temperature probe into wellhead temperature sample port.

- Connect all applicable sample train hoses. Verify that all connections are snug and air tight and verify sample train hoses are not pinched or kinked.

- Acquire gas concentrations and differential pressure. Activate sample pump (should pump for a minimum for 100 seconds while taking sample) and allow gas measurements to stabilize prior to storing measurements.

- Store measurements. Save one full line of data and note in the comments section what action will be completed prior to the adjusted reading.

- Determine if adjusted wellhead readings are necessary (See Table presented in Section 4.1).

    - Review initial wellhead measurements and verify that they are within the compliance guidelines and the operational limits as defined in Section 4.1.

    - If the initial measurements are out of compliance with MLI's operating limits in Section 4.2 or other permit requirements, make an adjustment following the adjustment guidelines listed below and adhere to the

monitoring procedures listed in the following sections for 5-day corrective action documenting events and 15-day recheck events.

6.2.4 Adjusted Wellhead Measurements

If an adjustment to the extraction well is required (refer to Section 3.1):

- Wait for the Analyzer to come to a steady state.
- Limit vacuum or flow change to approximately 10% increase or decrease from current reading, unless the well is in a known area of SSO or C&D fines, or the parameters listed in Section 3.1 are exceeded.
- Once the adjustment has stabilized, store reading with one of the suggested comments listed in Section 5.1. Supplemental comments may be included/added as warranted.

6.3 Liquid Level Measurement

A major limitation to LFG extraction is the presence of liquids within a collection well. Liquid renders the submerged portion of the screened interval of a LFG well useless. Controlling liquid buildup in LFG wells is the first step in effective gas management.

6.3.1 Measurement Frequency

Monitor liquid levels in select GCCS wells at least quarterly.

6.3.2 Liquid Measurement Procedure

Similar to the procedure for monitoring gas concentrations and flowrates at gas wells, the ATZ Applied Technologies' Precision Level Reader system, or equivalent, is used to record liquid levels by walking up to the wellhead, connecting the system to the sampling ports, and recording the liquid levels. With the Precision Level Reader system, it is not necessary to remove wellheads to measure liquid levels. As a result, the potential for fugitive air emissions that would otherwise occur when measuring liquid levels in gas wells with conventional water level meters is reduced.

6.4 Surface Emissions Monitoring Procedures

SEM will be performed on a monthly basis, unless a different frequency is otherwise required. These scans are intended to identify and quantify fugitive LFG emissions, but also act as a GCCS performance test allowing MLI to analyze areas of the collection system that may require upgrades or modifications to control surface emissions.

6.4.1 Surface Emissions Monitoring

Use the following procedures during the SEM event:

- Perform SEM in accordance with NSPS protocols documented in 40 C.F.R. §§ 60.755(c)(1) to 60.755(c)(4).

- Mark FID measurements that are above 500 ppm background levels (an exceedance) on the monitoring plan, and place a high-visibility field flag at exceedance location so location can be identified for future repairs by Facility personnel.

- Odors can occur from very low emission rates of LFG. Thus, MLI has adopted a Preventative Maintenance Program based on a methane concentration of 250 ppm. During weekly and monthly monitoring events, if MLI identifies a methane concentration measurement in excess of 250 ppm above an established background, the technician will investigate the area to determine the source of the emission.

- Record brief description of exceedance area on the Daily SEM Log Sheet.

6.4.2 SEM Weather Conditions

- Perform SEM during "typical meteorological conditions" per 40 C.F.R. § 60.755(c)(3).

- Use an on-site meteorological station during monitoring events to confirm wind speed.

- If the on-site meteorological station is inoperable, MLI will repair or replace the weather station prior to the next SEM event.

7 DATA MANAGEMENT AND REPORTING

7.1 Wellfield Data Management

Proper management of field data is critically important. Manipulation or misrepresentation of field data is a violation of the Clean Air Act and will not be tolerated by MLI and will be grounds for termination.

Upon downloading data from the meter, use the following procedures to manage the electronic and written field information.

7.1.1 Electronic Data (If applicable)

- **DO NOT ALTER THE RAW DATA FILE.**
- When naming the raw data file (meter download file), use the site name, date of the event, and technician's initials. Examples:
    - MLI tuned on February 7, 2012 by Joe Shanaynay = MLI020712JS.csv,
- Download the electronic data and e-mail to the Operations Manager, **within 24 hours** of completing the monitoring event, defined as one complete round of monitoring at each collection point at the facility.
- Retain copies of unaltered data files.
- All data files are the property of MLI. Copies of the files must be provided to MLI.
- If all of the data from a monitoring event is corrupted, lost, or is unusable, immediately re-monitor the entire wellfield.
- If data from certain wells is corrupted, lost, or is unusable, immediately remonitor those wells.

7.1.2 Reporting Procedures

Reports generated as part of this work are to be submitted to MLI personnel only, unless otherwise directed by MLI. These records will be retained by MLI at the Facility.

7.1.3 Monthly Wellfield Reports

Prepare a monthly wellfield report.[1] Include the following, at a minimum:

1. Mapped LFG collection and control system monitoring results for the month, including:
    - Maximum LFG temperature at each extraction location;
    - Maximum oxygen concentration at each extraction location; and
    - Maximum static pressure at each extraction location.

2. Summary of Landfill Cover and GCCS improvements, which includes a summary of the recommended improvements to the cover system and GCCS.
3. Summary of Landfill Monitoring Activities, which includes a summary of the landfill monitoring performed by MLI.
4. A monthly summary table containing the methane concentrations monitored in the on-site structures and perimeter gas probes.
5. Odor Response Summary Table, which includes a monthly summary of responses to each odor complaint and a description of measures taken to resolve the odor as performed by MLI.
6. A monthly summary table detailing LFG well pump status. For each well that has a dedicated pump, the table will state whether the pump is operating, not operating or broken.
    - If MLI has determined that a pump does not need to be in operation because conditions do not warrant its use, the reasons for that determination shall be stated expressly.
    - If a pump is broken, MLI shall include comments in the notes section explaining what measures have been taken to repair or replace the pump.

7.2 Liquid Level Data Management

Maintain historical information in a liquid level log electronic spreadsheet (Refer to Appendix H).[2] This information will be available to SWMP upon request. The following data will be recorded:

- Well ID,
- Date of well installation,
- Well's GPS or ground survey coordinates (northing and easting),
- Original ground elevation when well was drilled (Mean Sea Level (msl) -from survey data),
- Well’s top of liner elevation (msl)

- Well's length of perforated and solid casing (modify as casing heights are adjusted)
- Update the following information after a liquid level is obtained:
    - The current well elevation (msl) either from recent surveyor or field handheld GPS unit,

[1] These will be required to be submitted in the Post Closure Certification.

[2] Include this spreadsheet in the monthly Wellfield Reports described above in Section 7.1.3. above do demonstrate that the action levels are below those referenced in Section 3.3 of the Odor Plan.

    - Date of activity,
    - Measured depth to liquid,
    - Measured depth to bottom,
    - Calculation of current solid pipe length utilizing GPS elevations,
    - Calculation of feet of available perforations,
    - Calculation of percentage of screen available and blocked, and
    - Calculation of loss in well depth,
    - Update the liquid level log spreadsheet when new liquid levels are obtained.

7.3 SEM Report

Upon completion of each monthly monitoring event, prepare a report and include the following information:

1. Monthly SEM results including:
    - A map of cap/cover system penetration and grid locations that exceeded the applicable threshold; and
    - SEM table with each cap/cover system penetration and grid location that exceeded the applicable threshold.

2. Site Plans including the locations of the LFG extraction monitoring points and SEM serpentine path/grid monitoring points.

8 GCCS INSPECTION AND MAINTENANCE

8.1 Component Integrity Checks

MLI will conduct period checks of the system to identify conditions that render, or could render, the GCCS inoperable.

- During the inspection process use visual, audible, and tactile inspection techniques to evaluate components of the GCCS. This includes, but is not limited to, those listed in subsequent sections.
- GCCS inspection data will be used by MLI to identify possible system improvements and schedule repairs.
- Record problems found during inspection.
- Communicate findings to the Operations Manager through the monthly report. Notify the Operations Manager if an identified problem could cause a GCCS emergency or noncompliance with site-specific permit requirements, or federal, state, or local regulations.

8.2 Wellhead Inspection and Maintenance

The LFG collection wellhead is a critical maintenance item. It is the point where flow is regulated and compliance is demonstrated. Improper maintenance can result in non-compliant readings and/or improper balancing and tuning.

8.2.1 Inspect and Maintain

Inspect and maintain wellhead components to ensure consistent and reliable operation.

8.2.2 Document and Repair

Document any wellhead damage, wear and tear, and if the well was raised (Refer to Appendix E). Repair components to function as intended and document repairs that were made.

8.2.3 Inspection Frequency

Inspect as part of each monitoring event.

8.2.4 Joints

- Inspect mechanical joints (flexible coupler, flange, electro-fusion collar, etc.) on the wellhead and casing for leaks during each monitoring event.

- Immediately document and repair indications of vacuum leak. Potential leak indications include (but are not limited to):
    - Hissing sound coming from a joint.
    - Staining or accumulation of liquid on well casing or wellhead.

- Inspect all clamps and mechanical fasteners. Ensure they are tight and operating properly.

The application of duct tape and/or silicone to malfunctioning joints is considered a short term (15 days or less) "quick fix" and should not be considered a long-term solution. Once a joint malfunction is identified, notify Operations Manager of the situation and install a permanent replacement. If duct tape is used to temporarily repair a joint, the duct tape should be dated with a permanent marker to verify the duration the tape has been applied.

8.2.5 Valves

- Inspect valve components to verify they are in good condition and functioning as intended. Replace broken valve component(s) as needed.

- Completely open and close valve to ensure it operates smoothly through full range.

8.2.6 Sample Ports

- Inspect sample port(s) and o-rings for cracks and damage. Replace if damaged.

- Check for tightness and tighten as necessary.

- Check to see that sample ports are free of debris and clean as necessary.

- Inspect sample port caps for damage or deterioration. Replace if damaged or deteriorated.

- It is important that caps are in place on sample ports to prevent deterioration of port and dirt accumulation.

8.2.7 Flex Hose

- Inspect for:

- Cracks, brittleness and deterioration,
- Kinks and constrictions, and
- Proper length.
  - Appropriate length to promote condensate drainage.
  - Adequate length. Hose is not to be in tension and should be long enough to accommodate slight differential movement of well pipe and lateral riser.

- Replace if hose does not pass inspection.

8.3 Pump Inspection and Maintenance

MLI will dewatering pumps installed at LFG extraction wells. The following service shall be performed on each pump on at least a semi-annual basis (manufacturer's recommendation) or more frequently if needed (Refer to Appendix I):

- Pull pump from well and perform the following maintenance items. When pulling the pump, make sure the ground is as clean as possible.
  - Dissemble the pump;
  - Soak pump in a de-scaling bath;
  - Replace all soft parts (i.e. O-rings, springs, etc);
  - Set trigger points on float; and
  - Hone inside of FRP casing if needed.

- If the pump requires pressure washing, make sure it is done in a designated area. No pressure washing should occur outside the limits of waste.

- Once the above maintenance items are completed, consider doing a 6 hour pump test to test both slow and fast recharge rates.

8.4 Well and Surrounding Area Inspection and Maintenance

Per NSPS regulations (40 C.F.R. § 60.755(c)(5)), facilities must visually monitor cover integrity on a monthly basis. MLI does not have to comply with these regulations, but MLI intends to voluntarily perform the inspections (Refer to Appendix H).

8.4.1 Well Casing

- Visually inspect above grade well casings and surrounding areas for signs of damage, deterioration, or potential problems.

- Use below grade inspection techniques when GCCS monitoring data warrants (non-routine work -must be approved by the Operations Manager in advance).

8.4.2 Surrounding Area

Visually inspect the surrounding cover surface integrity on a monthly basis.

- Pay special attention to the cover located directly around each well casing, noting signs that the soil is desiccating or pulling away from the well casing.
- Note surface water erosion, ponding, leachate breakouts or staining.
- Note settlement around well casing. Immediately report settlement to the Operations Manager. Soil should be immediately applied to the area to match surrounding grade (non-routine work -must be approved by MLI in advance).
- Complete the form included in Appendix H and note on a facility map the areas of concern. The Operations Manager must sign off on the map acknowledging that they are aware of the areas of concerns.

8.4.3 Report Findings

- Report findings immediately following the event to the Operations Manager so that the appropriate repairs can be performed.
- Provide an accurate description and location of the repair needed.

8.5 Flare Inspection and Maintenance

LFG blowers and compressors require regular inspection and maintenance in order to ensure long life and reliable operation.

8.5.1 System Operation

In order to avoid causing a problem to the system due to a forced system shutdown, MLI should take the following step:.

- Perform forced shutdown quarterly. Use emergency stop (e-stop) to force shutdown.
- Observe all fail-safe components, document and repair components that do not perform as intended.

8.5.2 Blower Bearing Temperature

MLI should inspect for excessive bearing temperature (relative to design or manufacturer's suggested operating temperature) during each monitoring event, as

follows:

- Monthly, collect a temperature reading using an infrared laser thermometer at a consistent location on the bearing cap; and
- Record the temperature and plot temperature trends to identify wear or potential failure of the bearing.

8.5.3 Blower / Motor

- Inspect for proper operation.
- Check to see that parts are properly lubricated, per manufacturer's recommendations.
- Inspect monthly for excessive vibration in blower / motor relative to normal operating conditions.

For redundant blowers, operationally rotate blowers monthly to balance equipment run time hours.

8.5.4 Belts (Belt Drive units, Where Applicable)

- Inspect and adjust drive belts.
    - Inspect quarterly.
    - Document and replace as necessary.

8.5.5 Flexible Couplers (Direct Drive Units, Where Applicable)

- Inspect for wear or damage.
    - Inspect quarterly.
    - Document and replace as necessary.

8.5.6 Blower / Motor Safety Devices

- Check that safety devices (belt shrouds, cages, shields, etc.) are installed and functioning properly.
    - Inspect monthly.
    - If safety devices are not installed or functioning properly, notify the Operations Manager immediately.
    - Document and repair / replace as necessary.

8.6 Control Device Inspection and Maintenance

8.6.1 System Operation

GCCS control devices (blower/flare, compression skids, etc.) all have safety features built into the system that insure proper operation of components at tolerances supplied by the manufacturers. These safety features (presence of flame, bearing temperature, flash back monitoring, flame temperature, louver control, fail-safe valve operation, etc.) may individually or wholly be compromised if the flare is not operated in automatic mode. Automatic mode ensures that the flare is operating safely, and the system will properly run through a shut-down procedure if tolerances do not meet programmed set-points. Operation of the flare in manual mode by-passes most, if not all of these safety features and cannot be utilized except for short-term testing purposes, with the operator present at all times.

- System must be operating in automatic mode. Do not operate system in manual mode.
    - If system will not operate in automatic mode, stop system, and begin troubleshooting process to determine cause.
    - If a cause cannot be readily found, immediately notify the Operations Manager of situation. Do not restart the system.
    - An experienced, professional contractor should be contacted immediately to begin repair of the system.
- Ensure proper fail-safe operation during forced system shutdown.
- Perform forced shutdown quarterly.

Observe all fail-safe components, document and repair components that do not perform as intended.

8.6.2 Control Panel

- Monthly, verify all indicator lights, gauges, and other components are operational.
- Check for loose wires semi-annually.
- Check for and remove debris, rodents, and insects that may have entered the panel.

8.6.3 Flame Arrestor

- Check differential pressure monthly.
- Remove and clean flame arrestor annually, or when differential pressure is above manufacturer's specification.

8.6.4 Thermocouples

- Inspect for indications of thermocouple failure monthly.
- Check for heat damage annually.
- Replace as necessary.

8.6.5 Valves

- Exercise all valves monthly, and during each shutdown.
- Exercise valves across the complete operational range of the valve.

8.6.6 Pilot System

- Verify supply of pilot gas during each monitoring event.
- Verify integrity of supply lines from tank regulator to pilot controls.
- Verify operation of pilot system during each shutdown.

8.6.7 Flow Meter

Flow meters provide data to document compliant flow for regulatory agencies, gas sales, greenhouse gas reduction, and/or provide accurate data for wellfield evaluation. Without proper maintenance, flow measurement accuracy begins to decline over time and should be serviced and calibrated regularly.

- Calibrate Instrumentation
    - Per manufacturer's recommendations, or annually at a minimum.
    - Calibration usually requires removal of the flow measuring device from the header line.
    - The unit is typically shipped back to the manufacturer for calibration and maintenance.

    - A spare or loaner flow device should be inserted into the header pipe while the primary device is being serviced.

- Insertion Type Meters (thermal mass)
    - Pull and clean probe quarterly.
    - Verify proper position and orientation prior to removal and following replacement.
    - Verify meter is properly zeroed by forcing shutdown and observing the recorded flow. Flow should be zero during a forced shutdown.

- Pressure Transmitter Type
    - Verify consistent measurements or that meters zero properly when system is down or during forced shutdowns.

8.7 Spare Parts

MLI should maintain a spare parts inventory for the GCCS. Consult the site-specific O&M manual(s) for each system component to ensure that the recommended spare parts are included in the inventory. MLI should re-order those parts when used from the inventory. Recommended inventory includes:

8.7.1 Control System

- Drive belts,
- One thermocouple of each type/size present on control device,
- Propane for pilot system,
- Compressed gas (nitrogen or compressed air) for pneumatic valve operation,
- Blower bearing set (front and back) for each blower on-site,
- Indicator light bulbs, and

8.7.2 Collection System

- Flex hoses,
- Flex hose clamps,
- Sample ports (brass hose barbs or plastic quick connect fittings),
- Sample port stoppers (silicone plugs) if using hose barb equipped wellheads,
- Thermometer (where installed),
- Wellheads,
- Flexible PVC couplers,

- Band clamps,
- Gaskets,
- Spool pieces for well extensions (6-inch SDR11 HDPE or other site-specific material), and
- Bolt kits.

8.8 Condensate Management System Inspection and Maintenance

Inspect the condensate management system and its appurtenances for proper operation of the system. This section describes the monitoring and reporting procedures associated with the LFG condensate collection and removal system ("CCRS") at the landfill.

8.8.1 Condensate Overview

The CCRS is integral to the LFG collection system. The same piping that contains and collects LFG contains and collects LFG condensate. The LFG/condensate collection piping is graded so the condensate flows towards low points in the collection system. Condensate sumps are located at all these low points, and the condensate drops into the sumps so that it does not block the flow of LFG in the collection piping. Condensate is pumped automatically from the sumps to the condensate storage tank, from which it is routinely shipped off-site to a wastewater treatment facility.

8.8.2 Condensate Management System

The CCRS for the landfill consists of a 0.33M gallon above ground double-wall steel collection tank for storage of condensate from the LFG collection system, as well as leachate generated in Cells 1, 2, 3 and unlined capped area. The leachate collection systems for Cells 1, 2, and 3 operate on pump systems. In the event that the leachate storage tank at the landfill reaches capacity, the leachate pumps feeding that tank shall be shut down. This should only occur in emergency situations and not beyond a one-week period. The tank should be pumped as soon as possible by the primary leachate hauler. If the contractor is unable to respond, another municipality or private hauler should be contacted to pump the tanks and deliver the leachate to a treatment facility. In the event that MLI needs to continuously haul leachate (i.e. 24- hours a day) for a period of time in an emergency situation, approval of a minor modification to the existing Act 250 Land Use Permit from District 5 of the Land Use Panel of the Vermont Natural Resource Board will be necessary.

In the event that Essex Junction Wastewater Treatment Plant ("WWTP"), Burlington North WWTP or Barre WWTP cannot accept leachate from the landfill, the leachate will be transported to another facility. MLI contracts with a local hauler to provide

transportation of leachate. In the event that the primary leachate hauler is unable to provide leachate transportation, MLI will contract with another hauler.

8.8.3 Monitoring Requirements

Visual inspections of the condensate knockout tanks, including the pumping systems and the flare skid shall be performed on a daily basis. These items should be documented in a field notebook or on a report form and kept on SiteOn a weekly basis, MLI, or their designated consultant who is properly trained, shall inspect the CCRS.

Currently the facility performs daily visual inspections since portions of Cells 1, 2, and 3 are not yet fully capped. In the future, the frequency of many tasks to monitor odor will decrease from daily to weekly or monthly as needed. Furthermore tasks that occur weekly or monthly will occur on a monthly to quarterly basis.

8.8.3.1 Condensate Pump Stations

- Report date.
- Person performing the inspection.
- Monitoring and maintenance check list.
- Inspect for proper operation monthly.
- Record pump counts or hour meter measurements and verify advancement.
- Should no advancement be found where it normally exists, investigate to determine if pump is operational.
- Pull and inspect pumps for damage/wear per manufacturer's recommendation or when suspected problem is encountered.

8.8.3.2 Knock – Out Pot (KOP)

- Verify KOP is operational and drained monthly.
- Verify site glass is intact and unobstructed monthly.
- Depth of condensate in the knockout structures.
- Whether liquids are present in the interstitial space between the walls of the condensate knockout(s), as applicable.

8.8.3.3 KOP Demister PAD

- Record differential pressure across demister pad monthly.
- Clean or replace annually, at a minimum, or when differential pressure across the pad is above the manufacturer's maximum differential pressure specification.

8.8.3.4 Exercise All Valves

- Exercise valves associated with the condensate management system.
    - Monthly.
    - Across full operating range.

8.8.4 Maintenance Requirements

Condensate can be corrosive. Equipment should be checked frequently for the effects of corrosion. The maintenance requirements of the pumps fall under three main areas: seals and bearings, motor components and lower assembly components. The Maintenance and Troubleshooting Guide for the extraction pumps is included in Appendix A.

Seals are found in the pump head and piston assembly. The length of time between seal replacement can vary greatly with amount of use and the nature of the liquid being pumped. These signs should be used to know when seals need to be replaced:

- For piston seals: when output drops appreciably.
- For pump head seals: when significant amounts of liquid leads from the indicator hole on the pump head.

Bearings are found in the backplate and linkage assembly. The length of time between bearing replacement will vary greatly with amount of use and the nature of the liquid being pumped. Most users only perform maintenance on the bearings upon indication of a problem, and usually only the bottom linear bearing and exterior dog bone bearing will ever require replacement. These should be used to know when bearings need to be replaced:

- For backplate linear bearings: when there is significant wear within the housing, as evidenced by significant lateral movement of the insert within the mounting pillow block.
- For linkage assembly bearings: when they show significant wear, as evidenced by significant lateral or sloppiness within the bearing assembly.

AC motor life expectancy under continuous operation is estimated by the manufacturer to be 2 years, influenced by applied motor loads and operating conditions. DC motor life expectancy under continuous operation is estimated by the manufacturer to be 1.5 years, influenced by applied motor loads and operating conditions. The DC motors include brushes, which may require replacement after a certain number of operating hours.

8.8.5 Condensate Sampling & Analysis

During the months of May and October of each year, MLI shall retain a qualified professional to perform collection system monitoring. Monitoring shall be performed by collecting a grab sample collection systems separately for Cells 1, 2, and 3.

The following laboratory analyses shall be performed on all samples:

- Chemical Oxygen Demand
- Biological Oxygen Demand
- Total Sodium
- Total Chloride
- The following Total Metals
- Arsenic
- Cadmium
- Chromium
- Copper
- Iron
- Lead
- Manganese
- Mercury
- Nickel
- Zinc
- Volatile Organic Compounds utilizing EPA Method 8260; and
- Semi-Volatile Organic Compounds utilizing EPA Method 8270.

In addition to collecting laboratory samples, temperature, pH, and specific conductance shall also be performed in the field on samples at each sample location.

8.8.6 Record Keeping & Reporting

MLI shall record leachate and condensate flow from the collection system during each working day. In addition, MLI shall record the quantity removed from the aboveground storage tank. For each load shipped, MLI shall record the quantity, the date shipped, and the identity of the WWTF receiving the shipment.

Currently the facility performs daily inspections since portions of Cells 1, 2, and 3 are not yet fully capped. In the future, the frequency of many of these tasks will be resolved in the Post-Closure Odor Plan, or MLI will have to make a proposal to the state for reduced monitoring frequency.

Collection System Monitoring Summary Table			
Parameter	**Discharge Limitations**	**Monitoring Frequency**	**Sample Type**
Flow from ASTs	Essex Jct WWTF (40,000 gpd) Burlington North WWTF (10,000 gpd) Barre WWTF (30,000 gpd)	Daily	Daily Total
Individual Cell Primary Leachate Flow	Monitor Only	Daily	Daily Total
Individual Cell Secondary Leachate Flow	20 gallons/acre/day (after deducting the volume of tracer introduced into the secondary detection systems)	Daily	Daily Total
Chemical Oxygen Demand	Monitor Only	May & October	Grab
Biological Oxygen Demand	Monitor Only	May & October	Grab
Total Sodium	Monitor Only	May & October	Grab
Total Chloride	Monitor Only	May & October	Grab
Total Metals	Monitor Only	May & October	Grab
Volatile Organic Compounds	Monitor Only	May & October	Grab
Semi-Volatile Organic Compounds	Monitor Only	May & October	Grab
Temperature	Monitor Only	May & October	Grab
pH	5.0 - 9.5	May & October	Grab
Specific Conductance	Monitor Only	May & October	Grab

8.9 Continuous Monitoring Equipment Inspection and Maintenance

MLI will install and properly operate and maintain combustible gas monitoring systems in on-site buildings.

8.9.1 Combustible Gas Monitoring System

- Stand-alone system
    - Inspect and test for proper operation.
    - Inspect and test quarterly.

- Apply a span gas to activate alarm and adjust their activation set point, if applicable.
- Calibrate according to manufacturer's recommendations.
- If units fail to calibrate or are non-functional, notify the Operations Manager immediately.

- Alarm monitoring system
  - Inspect quarterly.
  - Test annually for proper operation.
  - Calibrate according to manufacturer's recommendations.

If units fail to calibrate or are non-functional, notify the Operations Manager immediately.

8.10 Main Collection Piping Inspection and Maintenance

MLI will perform period inspections of the main collection piping systems as set forth below.

8.10.1 Sample Points

During each monitoring event, MLI will check strategic vacuum monitoring points and record for use during troubleshooting.

8.10.2 Valves

- Exercise valves through their full range of motion to ensure proper operation.
  - Semi-annually.
  - During this task, monitor vacuum on both sides of valve to verify that valve is operating as intended.

8.10.3 Access Points

MLI should inspect collection piping access points (large sumps, man-holes, etc.) for integrity (gaskets, flange, piping, etc.) on a quarterly basis. MLI should also inspect leachate clean-out risers, man-holes, tanks, etc. for gas leaks or possible points of air intrusion on a quarterly basis. Areas of apparent gas leaks or air intrusion should be noted and brought to the immediate attention of the Operations Manager.

9 SUBSURFACE OXIDATION (SSO-POTENTIAL LANDFILL FIRES)

Because subsurface oxidation events are serious situations that could potentially damage large areas of the landfill and generate odors, subsurface oxidation events should be reported immediately to the Operations Manager.

9.1.1 Symptoms

- Dramatic localized landfill settlement;
- Charred or cracked surface cover;
- Stressed or dead vegetation in an area that is otherwise properly vegetated;
- Smoke or smoky odor emanating from the landfill surface or wellhead;
- Drastic or unusual increase in flowing gas temperature;
- Abnormal discoloration of wellhead/riser assembly; or
- Deformed riser pipes.

9.1.2 Notifications

Notify the Operations Manager immediately after identifying any potential SSO.

9.1.3 Initial Investigation

- Health and Safety Considerations:
    - First consult HASP for procedures related to landfill fires.
    - Do not breathe landfill gas or smoke. Stand upwind of any emissions.
    - Wear appropriate PPE. Burns may be caused by hot PVC / HDPE / steel.
    - Do not drive heavy equipment/vehicles near well or depression until ground stability has been verified.
- The burned waste mass may give way and equipment/personnel may fall into sinkhole.
- Do not change the condition of the well during the initial investigation, unless necessary.

- Conduct physical inspection.
    - Inspect the nearest extraction well to the potential SSO location.
    - Inspect all wells within 500 feet of nearest extraction well to the potential SSO location.
    - Inspect the landfill surface within 500 feet of nearest extraction well to the potential SSO location.
    - Visibly inspect for large localized settlement, cracks, holes, collapse, missing components, or areas that could be sources of air intrusion into the waste mass:
        - Monitoring ports,
        - Well casing,
        - Well / component perforation boots,
        - Hoses,
        - Erosion ruts / rills,
        - Dry soil cracks,
        - Manways,
        - Lift stations,
        - Sumps, and
        - Leachate cleanout risers.
- Measure gas quality, pressure and temperature, at all wells within 500 feet of nearest extraction well to the potential SSO location.
    - Special precautions may be necessary to address high gas temperatures.
    - Measure CO concentrations with colorimetric tubes (QRAE tubes or equal) at all wells within 500 feet of nearest extraction well to the potential fire location.
    - Gas temperature and other interference gasses can affect the accuracy of the measurement; therefore, the results of any CO monitoring should be expressed qualitatively only.
    - Follow tube manufacturer's instruction on the use of pre-filters and/or carbon pre-tubes to minimize interference gasses.
- Infrared Thermometer Survey
    - Use an IR laser thermometer to measure the temperature of the ground surface in the area of the suspected SSO.

- Shallow fires or fires that have consumed large amounts of trash will produce elevated surface temperatures. Extreme caution must be taken in these areas due to the likelihood of the ground giving way.

9.1.4 Data Analysis

- Determine the state of the SSO.
    - Analyze temperature gradient between monitored wells.
    - Analyze oxygen gradient between monitored wells.
    - Analyze nitrogen to oxygen ratio gradient between monitored wells.
    - If nitrogen is not measured directly, assume balance gas is nitrogen.
    - Analyze pressure gradient between monitored wells.
    - Analyze methane to carbon dioxide ratio gradient between monitored wells.

9.1.5 Removing the Oxygen from the Fire

The key to stopping an SSO once it has begun is to completely restrict oxygen from entering the smoldering waste mass (snuff out the fire). Once the initial investigation has been performed, and a general sense of the extent of the SSO has been determined, safely begin to restrict further oxygen intrusion using the following method:

- Shutdown well(s) that is believed to have been the cause of the SSO.
- Shutdown all wells in surrounding area (within approximately 300 feet of suspect well(s)).
- Cap or repair any item identified during the physical inspection that may be contributing to oxygen intrusion.
- Carefully add additional cover to areas that show cap integrity issues, if necessary. Work slowly and pay special attention to the ground surface as material placement commences.
    - During cover placement activities, there should be a minimum of two people available; the equipment operator, and a line-of-sight person on the ground that is responsible for watching the ground surface as the equipment operator places the soil.
    - Use a low ground pressure (LGP) machine, if available. If LGP machine is

not available, use the lightest machine with the widest tracks available. Do not use rubber tired machines to place cover material.

- Slowly push soil into the area and compact with the bucket or tracks of the equipment.

Note: Closing wellhead valves to minimize vacuum in the area of concern may cause vacuum levels to increase within the header system. This will redistribute the overall vacuum applied to the wellfield and may cause higher vacuums to other wells in the GCCS. Carefully watch for redistribution of vacuum, and adjust the prime mover vacuum set-point accordingly. If more than 10 percent of the total wells in the wellfield are closed to remediate the SSO, a complete retune of the wellfield may be warranted.

9.1.6 Things to Avoid

- Flushing the well with water. Flushing the well with water can potentially clog the well. It will also generate steam, pressure, and odor when water hits SSO area and may push the "hot spot" out away from the well – increasing the scope of the SSO.

- Excavating soil in the SSO area. Do not excavate in the SSO area. Excavation will allow additional oxygen to enter the already smoldering waste mass and can potentially auto-ignite.

- Venting. Do not remove the wellhead to vent the well. Wellfields are typically under negative pressure. Residual vacuum exists in the waste mass for a period of time when wells are closed. If the wellhead is removed to vent, it is highly possible that the residual vacuum in the area will pull ambient air into the waste mass adding oxygen to the SSO.

- Dry ice application. While dry-ice may have a temporary cooling effect on the physical well casing, it will have little to no effect extinguishing the SSO. Additionally, in order to apply the dry ice to the well, the wellhead has to be removed, allowing oxygen a pathway to the waste mass (see above).

- Introduction of water into open cap fissures. Applying water to open fissures in the cap where an SSO exists can create a plume of highly odorous steam. It is also dangerous to bring a heavy, rubber tired water truck to the area to apply water. The steam created can be dangerous to workers in the immediate area. If an open cap fissure exists in an SSO area, follow the procedure for placing cover soil described in Section 9.1.5. Removing the pathway for oxygen intrusion is the most effective way to extinguish the SSO.

9.1.7 Continued Monitoring

- Monitor the wells closest to the suspected SSO area and adjacent wells at least

once a day for two weeks.

- Monitor for gas quality, temperature, and CO.
- As the SSO subsides, residual CO will remain in the waste mass for weeks and possibly months. Elevated CO levels are not a reliable indicator that an SSO is still in progress. However, CO levels should generally decline with time if the oxidation has been terminated.
- Once SSO indicators are no longer noted (Sections 9.1.1), monitor the well and adjacent wells once a week for at least four months before returning to normal monitoring schedule.

9.1.8 Timeline

It is important that a structured SSO monitoring plan, and diligent adherence to the plan, be carried out to return the wellfield to SOP operations as soon as possible; however, it is advisable to take time and slowly ensure the SSO is fully extinguished, and that the bacteria population in the area has recovered and is consistently producing gas.

The severity of the SSO, the age of the waste, moisture content, and a number of other variables will all determine how long it takes the wellfield to properly function. Experience has shown that the timeline from the point when the SSO is identified and extinguished to the point when the wellfield resumes normal operations can vary from two to three weeks up to (in some serious SSO situations) one year or more.

10 HYDROGEN SULFIDE

This section has been included to outline the effects of Hydrogen Sulfide ("H_2S") and the different concentrations that may pose a threat to human health.

- H_2S is a flammable (explosive between 4 percent and 45 percent in air), colorless gas with a characteristic strong odor of rotten eggs.
- H_2S is slightly heavier than air and accumulates in enclosed, poorly ventilated, and low-lying areas.
- H_2S gas may be converted into sulfur dioxide, which is one of the six priority pollutants that are subject to the national ambient air quality standards.
- Humans can smell H_2S gas at relatively low levels (0.0005 to 0.3 parts per million {ppm}). At concentrations above 100 ppm, humans may not detect H_2S gas due to olfactory fatigue.
- H_2S is readily soluble (3,700 milligrams/liter) in water. When liquids contaminated with H_2S gas are exposed to the air, dissolved H_2S gas may be emitted into the atmosphere.

The table below summarizes the various standards, guidelines, and screening levels for H_2S.

Hydrogen Sulfide Gas Standards, Guidelines, and Screening Levels	Concentration
H_2S Olfactory Lower Range:	0.0005-0.3 ppm
H_2S Olfactory Fatigue:	100 ppm (at 2-15 minute exposure)
USEPA Region 9 Preliminary Remediation Goal; Chronic exposure (residential) scenario, 30 years 24 hours/day, taking into account child exposure:	0.0007 ppm
USEPA Region 3 Risk Based Concentration; Chronic exposure (Residential) Scenario, 30 years, 24 hours/day:	0.0015 ppm
USEPA Acute Inhalation exposure Guideline:	0.51 ppm for 1 hour 0.36 ppm for 4 hour exposure 0.33 ppm for 8 hour exposure
American Industrial Hygiene Association Emergency Response Planning Guideline:	0.1 ppm as a 60 minute time weighted average concentration

Hydrogen Sulfide Gas Standards, Guidelines, and Screening Levels	Concentration
ATSDR Acute Minimum Risk Level (1-14 days exposure): Intermediate Minimum Exposure Level (15-365 days exposure):	0.07 ppm (acute) 0.03 ppm (intermediate)
OSHA Permissible Exposure Limit, General Industry:	20 ppm (50 ppm peak for 10 minutes)
NIOSH Recommended Exposure Limit (40 hours):	10 ppm
NIOSH Immediately Dangerous to Life or Health:	100 ppm

10.1 H_2S Sampling Standard Operating Procedure

A sulfur pretreatment system has been installed at the Moretown Landfill to reduce emissions of sulfur dioxide ("SO_2"). The system must be monitored for concentrations of H_2S to assess the life of the treatment media.

10.1.1 Equipment List

- Peristaltic pump (Geotech Geopump, or similar);
- Teflon tubing (approximately 20 feet);
- Quick connect fittings to match sample ports;
- Teflon air sampling bag (minimum of 3);
- Sorbent media H_2S detector tubes (Draeger H_2S 100/a and Draeger H_2S 2/a, or Gastec #4HM and Gastec #4L, or similar);
- Pump for sorbent detector tubes;
- Airtight tape;
- Notebook.

10.1.2 Monitoring Strategy

Samples of air will be collected from the inlet, midpoint, and outlet of the pretreatment system using a peristaltic pump, Teflon tubing and a Teflon air sampling bag. The concentration of H_2S in each bag will be analyzed using a sorbent media detector tube and recorded. Sorbent media gas detector tubes are thin glass tubes with calibration scaled printed on them so the user can directly ready concentrations of the substance being measured. Each tube contains a sorbent media which has reagents that are especially sensitive to the target substance in order to produce a distinct layer of color change. They are a quick, stable, real-time means to monitor concentrations.

Air samples should first be collected from the inlet, then the midpoint and finally the outlet. It is important that a different sampling bag be used for each sample since residual compounds from one sample location could taint other samples. Similarly, new Teflon tubing should be used for each sample location. Each tubing connection should be reinforced and secured with tape to ensure that the connection is airtight.

11 GREENHOUSE GAS REPORTING RULE

Landfills subject to the Mandatory Reporting of Greenhouse Gas ("GHG") Rule per 40 C.F.R. Part 98, must record the following information:

- Waste disposal quantity (and type if refined modeling will be used) for each year of landfilling.

- Continuously monitor LFG flow rate and determine the cumulative volume of LFG once per calendar week and the cumulative volume of LFG each year that is collected and routed to a destruction device before any treatment equipment.

- Determine the methane concentration in the LFG that is collected and routed to a destruction device before any treatment equipment in a location near or representative of the location of LFG flow meter no less than weekly.

On a weekly basis, MLI should collect a methane concentration and flow rate and complete the form included in Appendix L.

Standard Operating Procedure Acknowledgement Form

I understand and agree to abide by the provisions as detailed in this SOP. Failure to comply with these provisions may lead to disciplinary action, which may include dismissal from the work site, termination of employment or, for subcontractors, termination of the work contract.

Printed Name	Company	Signature	Date

APPENDIX A

EQUIPMENT SPECIFICATION FORMS

Technical Specifications

Operation Range

Unit	Minimum	Maximum	Comments
Envision	-22° F	140° F	Heater unit option for low temperatures

Gas Sensors

Gas Sensors	Range	Comments
CH4	0 - 100%	Infra-red cell
CO2	0 - 100%	Infra-red cell
O2	0 - 22%	Electrochemical w/ 1,000,000 O2% hours = Approximate life 5.4 years

Gas Sensor Accuracy

Range	CH4	CO2	O2
0-5%	±0.3%	±0.3%	±0.25%
5-30%	±1.0%	±1.0%	±<1% (Max O2 = 22%)
30 - 100%	±<2.0%	±<2.0%	NA
Resolution	0.01%	0.01%	0.01%
T90	<30s	<30s	<13s

Pressure Sensors

	Range		
Static	(-)5 H2O to 5" H2O	(-)130" H2O to 130" H2O	Comments
Accuracy	0.375"	+/- 2% of reading	According to sensor manufacture specs.
Resolution	0.001	0.01	
T90	<1 ms	<10 ms	
Differential			
Accuracy	0.375"	+/- 2% of reading	According to sensor manufacture specs.
Resolution	0.001	0.01	
T90	<1 ms	<10 ms	
Available			
Accuracy	NA	+/- 2% of reading	
Resolution	NA	0.01	
T90	NA	<10 ms	

Elkins Earthworks, LLC
865 W. Liberty Street, Suite 170
Medina, Ohio 44256
www.elkinsearthworks.com

North America Sales
Phone (330) 725-7766
Fax (216) 373-0084
www.sales@elkinsearthworks.com

Note: All statements about sensor accuracy and product tolerances are subject to change in the final released unit. This technical specification sheet will be updated when final product is quoted.

Technical Specifications

Pump Specifications

" H2O	Flow (cc/min)
-138	260
-56	650
-11	1010
11	1030
56	740
138	440

Battery Specifications

Battery Life	up to 1000 full charge cycles
Battery Construction	NiMH (no memory)
Charge Time	4 hours from complete discharge

Battery Life (NiMH)

Temperature (°F)	Life (hours)
77	13.8
50	13.1
32	10.5
14	6.6
-4	2.6

WARRANTY EXCLUSIONS AND DISCLAIMER. Elkins Earthworks, LLC. does not guaranty or warrant the results obtained through use of the Products. Accuracy and precision may be affected by:

1) improper or inadequate maintenance by Customer;

2) Customer or third party supplied products, software, interfacing or supplies;

3) unauthorized modification;

4) improper use or operation outside of the specifications for the Product;

5) misuse, abuse, negligence, accident;
6) or damage caused by accident, lightning or other electrical discharge, fresh or salt water immersion or spray, or exposure to environmental conditions for which the Product is not intended;

7) unauthorized maintenance or repair; normal wear and tear on consumable parts (e.g., batteries).

Elkins Earthworks, LLC
865 W. Liberty Street, Suite
Medina, Ohio 44256
www.elkinsearthworks.com

North America Sales
Phone (330) 725-7766
Fax (216) 373-0084
www.sales@elkinsearthworks.com

Note: All statements about sensor accuracy and product tolerances are subject to change in the final released unit. This technical specification sheet will be updated when final product is quoted.

3/19/2008

GEM2NAV

PORTABLE GAS ANALYZER INSTRUMENTATION

Industry Standard Portable Gas Analyzer With GPS

The GEM2NAV with GPS is designed specifically for use on landfills to monitor landfill gas (LFG) for the purpose of audit trail and data integrity. The GEM2NAV samples and analyzes the methane, carbon dioxide, oxygen content of landfill gas and locating of wells.

Features

- GPS device built into gas analyzer
- Stores up to 1,000 GPS locations
- Measures % CH_4, CO_2 and O_2 Volume, static pressure and differential pressure
- Calculates balance gas, flow (SCFM) and calorific value (KW or BTU)
- Displays % LEL of CH_4, and user-defined comments
- Records site and well conditions
- Extended operation (10 - 14 hrs use from one charge)

Benefits

- Ensures audit trail and data integrity
- Simple GPS diplay directions
- Designed specifically for use on landfills to monitor landfill gas (LFG) extraction systems, flares, and migration control systems.
- No need to take more than one instrument to site
- Can be used for routine sub-surface migration monitoring of landfill site perimeter probes and for measuring gas composition, pressure and flow in gas extraction systems
- Allows balancing of gas extraction systems

Applications

- Landfills
- Gas Extraction Wells
- Flare Monitoring
- Subsurface Migration Probes

Technical Specification

Gases Measured	CH_4, CO_2 by dual wavelength infrared cell with reference channel. O_2 by internal electrochemical cell

CH_4	0-100% Reading		
CO_2	0-100% Reading	O_2	0-25%

Gas Accuracy	CH_4	CO_2	O_2
0-5%	±0.3%	±0.3%	±1.0%
5-15%	±1.0%	±1.0%	±1.0%
15% - Full Scale	±3.0%	±3.0%	±1.0%

GPS	
Integrated SiRF Star III GPS receiver with 2-5 m typical accuracy	
Channels	12 (L1 code only)
Time to First Fix	50 seconds (typical)
Protocols	SIRF, NMEA-0183

Other Parameters	Unit	Resolution	Comments
Energy	BTU/hr	1000 BTU/hr	Calculated from specific parameters.
Static Pressure	in.H_2O	0.1 in.H_2O	Direct Measurement
Differential Pressure	in.H_2O	0.001 in.H_2O	Direct Measurement

Flow	Typically 300 cc/min
Flow with 5.9 in.Hg vacuum	Approximately 250 cc/min
Operating Temperature Range	32°F - 104°F
Operating Pressure	-100 in. H_2O, +100 in. H_2O
Relative Humidity	0-95% non condensing
Barometric Pressure	±5.9 in.Hg from calibration pressure
Barometric Pressure Accuracy	±1% typically
Battery Life	Typical use 10 hours from fully charged
Charge Time	Approximately 2 hours from complete discharge.
Certifications	UL Certified to Class 1, Zone 1, AEx ib d IIa T1

The Climate Registry

ISWA International Solid Waste Association

LANDTEC North America
Western Sales Office
(800) 821-0496 • Fax (909) 825-0591
Eastern Sales Office
(800) 390-7745 • Fax (301) 391-6546

LANDTEC South America
+55(11) 5181-6591 • Fax +55(11) 5181-6585
www.LANDTEC.com.br

Product designs and specifications are subject to change without notice. User is responsible for determining suitability of product.
LANDTEC, GEM and LAPS are registered with the U.S. Patent and Trademark Office.

SPECIFICATIONS

Integrated Landfill Gas Solution

Designed for Field Use

The revolutionary metal hydride hydrogen fuel cylinder allows up to 70 hours of continuous use at very low pressure (80 psi) to maximize your up-time in the field. With this long-life hydrogen fuel system, multiple shifts can use the SiteFID without returning for a refill. The metal hydride cylinder has a UN3468 identification number, so it can be shipped full of hydrogen by air cargo.

SiteFID Specifications:

EPA Standards: Meets or exceeds US EPA Method 21 regulations for determination of volatile organic compound leaks from landfills.
Detector: Flame ionization
Size: 13"L x 12"W x 3" D (33cm x 30.5cm x 7cm)
Weight: 11.0 pounds (5 kg).
Display: Large 2.8" (7.1 cm) diagonal active area. Backlight manually activated.
Keypad: Three menu keys
Connectivity: Wireless Bluetooth technology installed inside SiteFID housing. Does not require external Bluetooth device.
SiteFID Monitor Software Conectivity: Communicates wirelessly with SiteFID Monitor software on Trimble Nomad hand-held computer.
Hydrogen operating time: 70 hours
Hydrogen tank pressure: 80psi (2,068 mmHg)
Hydrogen cylinder shipping classification: UN3468. Can be shipped full of hydrogen by air cargo (shipping documentation required).
Re-light after flame-out: Can be re-lit from SiteFID Monitor software.
Battery Capacity: 15 hours
Response time: < 3 seconds
Operating concentration range: 0.1 ppm to 50,000 ppm
Operating temperature range: 32°F (0°C) to 122°F (50°C)
Operating humidity range: 0 to 100% (non-condensing)
Repeatability: +/- 2%
Alarm level: Preset by operator
Alarm: Audible at 85 dB, visual red LED on instrument body
Calibration Standards: Methane, hexane or propane
Intrinsic Safety: Class 1, Division 1, Groups A,B,C & D
FCC: Class B digital device, pursuant to Subpart B, class B of Part 15 of the FCC rules

© 2010 Trimble Navigation Limited. All rights reserved. Trimble and the Globe & Triangle logo are trademarks of Trimble Navigation Limited registered in the United States Patent and Trademark Office and other countries. All other trademarks are the property of their respective owners.

SS-SiteFID-22Dec10US

North & South America
10355 Westmoor Drive
Suite 100
Westminster, CO 80021
U.S.A.
Tel: 1-720-887-6100

Europe, Middle East & Africa
Am Prime Parc 11
65479 Raunheim
Germany
Tel: 49-6142-2100-0

Trimble.

FLO•WING®

"ACCURACY AT THE WELL" METER

Developed by ENERGYneering Solutions Inc.® to overcome the challenges of current wellhead technology, the Flo-Wing® Meter provides landfill operators the widest measurement range, unobstructed liquid passage and varied placement options. These attributes result in reduced maintenance costs, reduced facility down-time and increased confidence in flow measurement. Accuracy has been proven through calibration by Flow Dynamics Inc., Elkins Earthworks, the mechanical engineering department of George Fox University, and through field testing at landfill sites around the country. The Flo-Wing® Meter is compatible with any of today's commonly used monitoring instruments. ESI is flexible in their manufacturing process to include a variety of custom options to best fit your application and save valuable field assembly time. The second generation of Flo-Wing® inserts are molded from Royalite thermoplastic, "a rigid, fire-rated [PVC/acrylic] alloy which combines very high impact strength, good abrasion resistance, stiffness and hardness with excellent formability and exceptional chemical resistance" (Spartech Plastics).

Design Advantages:

- Wide flow measurement
- Horizontal and vertical placement
- Unobstructed liquid passage
- Reduced maintenance and downtime
- Accurate flow measurements

Sizes:

	1" (Model #180)	2" (Model #264)	3" (Model #360)
Recommended Flow Measurement Range	0 to 10 scfm	3 to 120 scfm	100 to 300 scfm
Equivalent Orifice Size for use with GEM	0.55 in.	1.30 in	2.10 in
Pipe ID	0.92 in	1.91 in	2.86

Available Options:

- Piping Materials – PVC, HDPE
- Standard Configurations – Vertical Wellhead, Horizontal Wellhead, Meter Run
- Custom Options – Valve Options, Flanges, Unions, Fernco® Fittings, Kanaflex® Hose & Clamps, Centralizing Supports and Accessories.

ENERGYNEERING® SOLUTIONS INC

PATENT PENDING

541.549.8766 • WWW.FLO-WING.COM

FLO•WING®
METER

Flow Rate Reference Tables:

For those who prefer to measure flow using a manometer or differential pressure gauge.

FLO-WING 1" (Model #180)

Diff. Pressure (inH2O)	Flow Rate (SCFM)	Diff. Pressure (inH2O)	Flow Rate (SCFM)
0.01	0.38	6.50	9.69
0.02	0.54	7.00	10.05
0.03	0.66	7.50	10.40
0.04	0.76	8.00	10.75
0.05	0.85	8.50	11.08
0.10	1.20	9.00	11.40
0.20	1.70	9.50	11.71
0.40	2.40	10.00	12.01
0.60	2.94	10.50	12.31
0.80	3.40	11.00	12.60
1.00	3.80	11.50	12.88
1.20	4.16	12.00	13.16
1.40	4.50	12.50	13.43
1.60	4.81	13.00	13.70
1.80	5.10	13.50	13.96
2.00	5.37	14.00	14.22
2.20	5.64	14.50	14.47
2.40	5.89	15.00	14.71
2.60	6.13	15.50	14.96
2.80	6.36	16.00	15.20
3.00	6.58	16.50	15.43
3.20	6.80	17.00	15.66
3.40	7.01	17.50	15.89
3.60	7.21	18.00	16.12
3.80	7.41	18.50	16.34
4.00	7.60	19.00	16.56
4.20	7.79	19.50	16.78
4.40	7.97	20.00	16.99
4.60	8.15	20.50	17.20
4.80	8.32	21.00	17.41
5.00	8.50	21.50	17.62
5.20	8.66	22.00	17.82
5.40	8.83	22.50	18.02
5.60	8.99	23.00	18.22
5.80	9.15	23.50	18.42
6.00	9.31	24.00	18.61

FLO-WING 2" (Model #264)

Diff. Pressure (inH2O)	Flow Rate (SCFM)	Diff. Pressure (inH2O)	Flow Rate (SCFM)
0.01	2.8	6.50	72.1
0.02	4.0	7.00	74.8
0.03	4.9	7.50	77.5
0.04	5.7	8.00	80.0
0.05	6.3	8.50	82.5
0.10	8.9	9.00	84.9
0.20	12.7	9.50	87.2
0.40	17.9	10.00	89.5
0.60	21.9	10.50	91.7
0.80	25.3	11.00	93.8
1.00	28.3	11.50	95.9
1.20	31.0	12.00	98.0
1.40	33.5	12.50	100.0
1.60	35.8	13.00	102.0
1.80	38.0	13.50	103.9
2.00	40.0	14.00	105.8
2.20	42.0	14.50	107.7
2.40	43.8	15.00	109.6
2.60	45.6	15.50	111.4
2.80	47.3	16.00	113.1
3.00	49.0	16.50	114.9
3.20	50.6	17.00	116.6
3.40	52.2	17.50	118.3
3.60	53.7	18.00	120.0
3.80	55.1	18.50	121.7
4.00	56.6	19.00	123.3
4.20	58.0	19.50	124.9
4.40	59.3	20.00	126.5
4.60	60.7	20.50	128.1
4.80	62.0	21.00	129.6
5.00	63.3	21.50	131.2
5.20	64.5	22.00	132.7
5.40	65.7	22.50	134.2
5.60	66.9	23.00	135.7
5.80	68.1	23.50	137.1
6.00	69.3	24.00	138.6

FLO-WING 3" (Model #360)

Diff. Pressure (inH2O)	Flow Rate (SCFM)	Diff. Pressure (inH2O)	Flow Rate (SCFM)
0.01	6.7	6.50	171.3
0.02	9.5	7.00	177.7
0.03	11.6	7.50	184.0
0.04	13.4	8.00	190.0
0.05	15.0	8.50	195.9
0.10	21.2	9.00	201.5
0.20	30.0	9.50	207.1
0.40	42.5	10.00	212.4
0.60	52.0	10.50	217.7
0.80	60.1	11.00	222.8
1.00	67.2	11.50	227.8
1.20	73.6	12.00	232.7
1.40	79.5	12.50	237.5
1.60	85.0	13.00	242.2
1.80	90.1	13.50	246.8
2.00	95.0	14.00	251.4
2.20	99.6	14.50	255.8
2.40	104.1	15.00	260.2
2.60	108.3	15.50	264.5
2.80	112.4	16.00	268.7
3.00	116.4	16.50	272.9
3.20	120.2	17.00	277.0
3.40	123.9	17.50	281.0
3.60	127.5	18.00	285.0
3.80	131.0	18.50	288.9
4.00	134.4	19.00	292.8
4.20	137.7	19.50	296.7
4.40	140.9	20.00	300.4
4.60	144.1	20.50	304.2
4.80	147.2	21.00	307.9
5.00	150.2	21.50	311.5
5.20	153.2	22.00	315.1
5.40	156.1	22.50	318.7
5.60	159.0	23.00	322.2
5.80	161.8	23.50	325.7
6.00	164.6	24.00	329.1

ENERGYNEERING SOLUTIONS INC

541.549.8766 • WWW.FLO-WING.COM

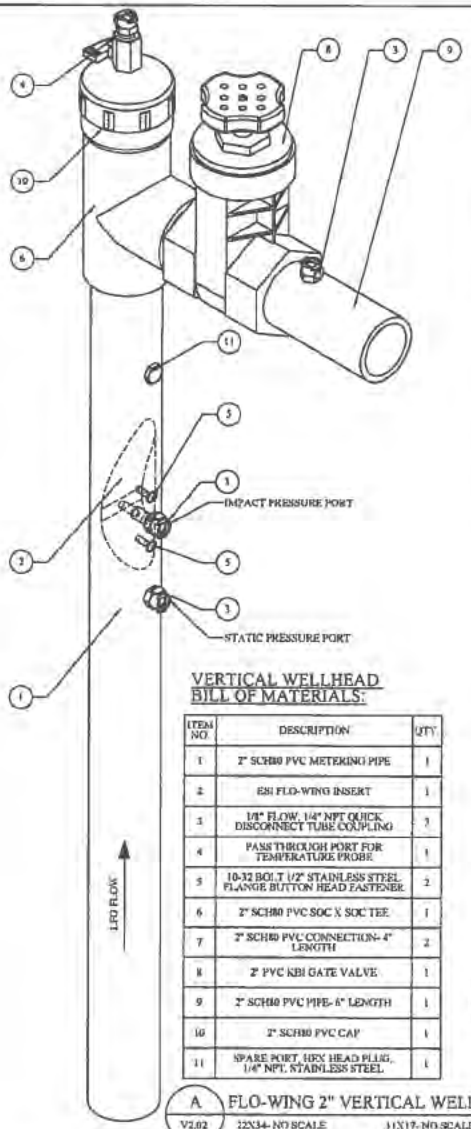

VERTICAL WELLHEAD BILL OF MATERIALS:

ITEM NO.	DESCRIPTION	QTY
1	2" SCH80 PVC METERING PIPE	1
2	ESI FLO-WING INSERT	1
3	1/8" FLOW, 1/4" NPT QUICK DISCONNECT TUBE COUPLING	3
4	PASS THROUGH PORT FOR TEMPERATURE PROBE	1
5	10-32 BOLT 1/2" STAINLESS STEEL FLANGE BUTTON HEAD FASTENER	2
6	2" SCH80 PVC SOC X SOC TEE	1
7	2" SCH80 PVC CONNECTION- 4" LENGTH	2
8	2" PVC KBI GATE VALVE	1
9	2" SCH80 PVC PIPE- 6" LENGTH	1
10	2" SCH80 PVC CAP	1
11	SPARE PORT, HEX HEAD PLUG, 1/4" NPT, STAINLESS STEEL	1

A V2.02 FLO-WING 2" VERTICAL WELLHEAD- ISOMETRIC
22X34- NO SCALE 11X17- NO SCALE

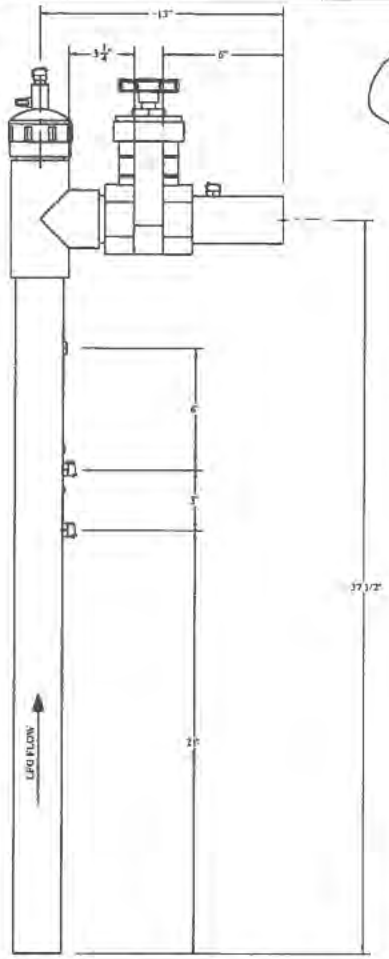

B V2.02 FLO-WING 2" VERTICAL WELLHEAD- PROFILE
22X34- NO SCALE 11X17- NO SCALE

HORIZONTAL WELLHEAD BILL OF MATERIALS:

ITEM NO.	DESCRIPTION	QTY
1	2" SCH80 PVC METERING PIPE	1
2	ESI FLO-WING INSERT	1
3	1/8" FLOW, 1/4" NPT QUICK DISCONNECT TUBE COUPLING	3
4	PASS THROUGH PORT FOR TEMPERATURE PROBE	1
5	10-32 BOLT 1/2" STAINLESS STEEL FLANGE BUTTON HEAD FASTENER	2
6	2" PVC GATE VALVE	1
7	2" SCH80 PVC PIPE- 6" LENGTH	1

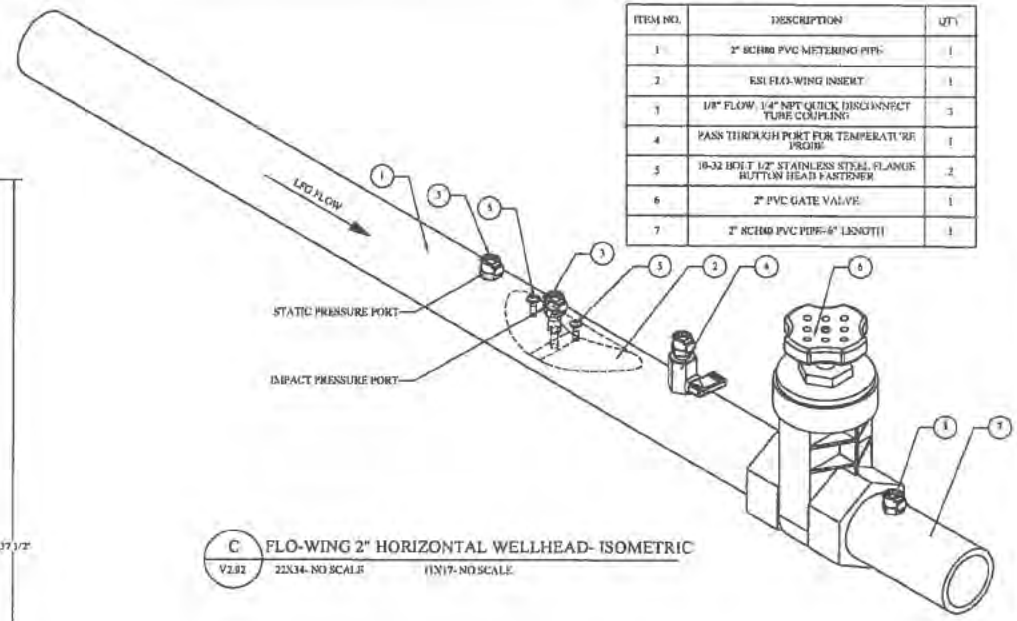

C V2.02 FLO-WING 2" HORIZONTAL WELLHEAD- ISOMETRIC
22X34- NO SCALE 11X17- NO SCALE

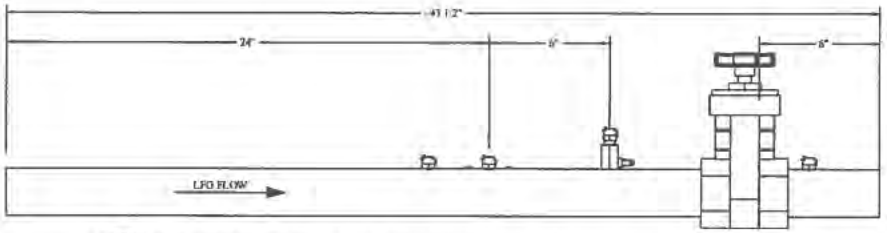

D V2.02 FLO-WING 2" HORIZONTAL WELLHEAD- PROFILE
22X34- NO SCALE 11X17- NO SCALE

REV	DATE	DESCRIPTION	DRN BY	DSN BY	CHK BY
Rev0	6/23/08	Design Drawing	JRM	JRM	JRM

FLO•WING

ENERGYNEERING SOLUTIONS INC
15820 Barclay Drive Sisters, OR 97759
Phone: (541) 549-8766
Fax: (541) 549-1901

FLO-WING 2" Wellheads

FLO-WING Meter

Drawing No. V2.02

Project No.

ITEM NO.	DESCRIPTION	QTY
1	3" SCH80 PVC METERING PIPE	1
2	FSI FLO-WING 3" INSERT (Model #360)	1
3	1/8" FLOW, 1/4" NPT QUICK DISCONNECT TUBE COUPLING	3
4	PASS THROUGH PORT FOR TEMPERATURE PROBE	1
5	10-32 BOLT, 1/2" STAINLESS STEEL FLANGE BUTTON HEAD FASTENER	2
6	3" PVC GATE VALVE - SPEARS	1
7	3" SCH80 PVC PIPE - 12" LENGTH	1

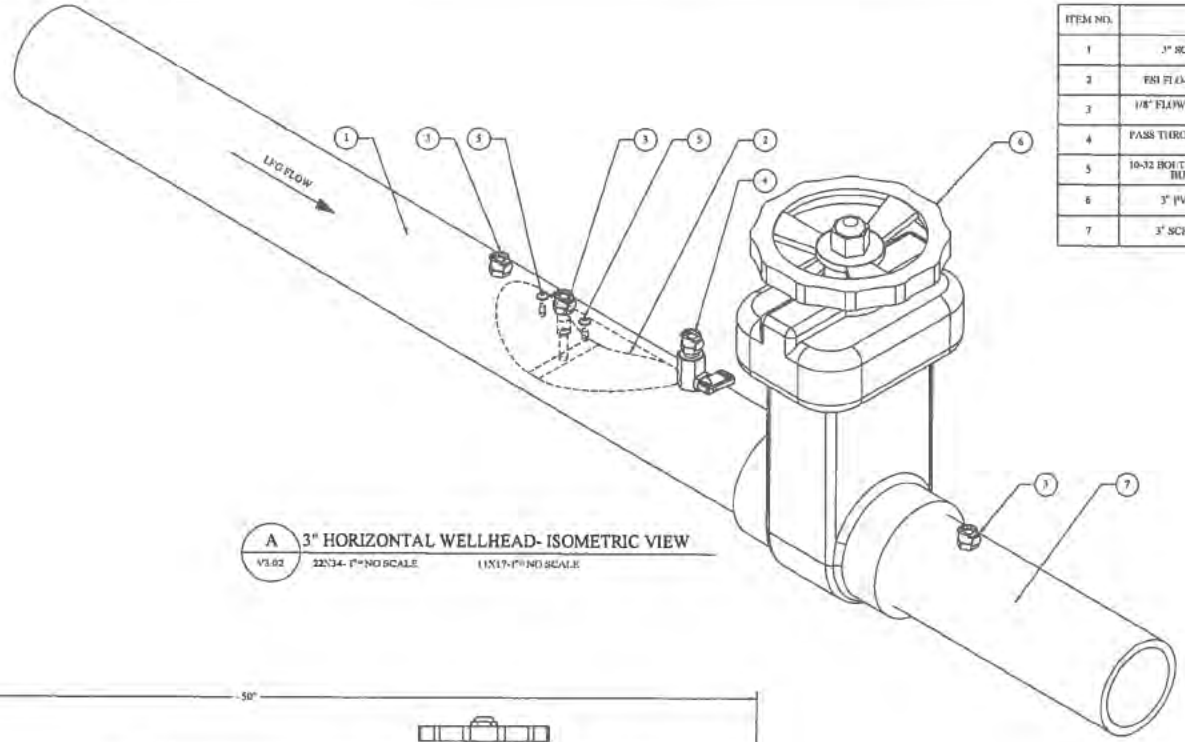

A V3.02 3" HORIZONTAL WELLHEAD- ISOMETRIC VIEW

22X34- 1"=NO SCALE 11X17-1"=NO SCALE

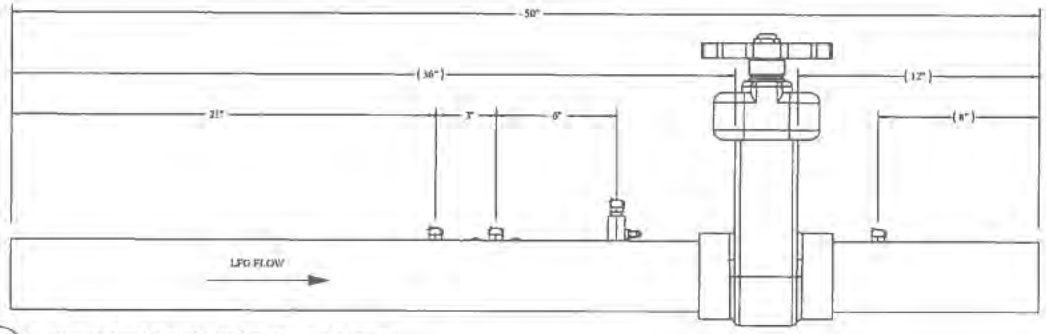

B V3.02 3" HORIZONTAL WELLHEAD- PROFILE VIEW

REV	DATE	DESCRIPTION	DRN BY	DSN BY	CHK BY
Rev0	6/3/09	Design Drawing	JBM	JBM	JBM

FLO•WING METER

ENERGYNEERING SOLUTIONS INC
15820 Barclay Drive Sisters, OR 97759
Phone: (541) 549-8766
Fax: (541) 549-1901

FLO-WING 3" Horizontal

FLO-WING
Eccentric Venturi Flow Meter

Drawing No.
V3.02
Project No.

ATZ | APPLIED TECHNOLOGIES

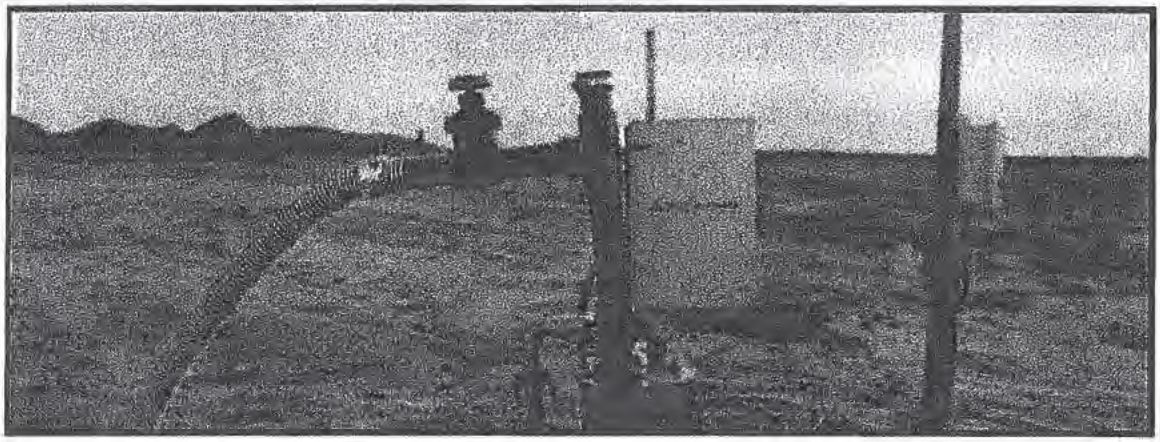

Maintenance & Troubleshooting Guide

LEP-1507-E, LEP-1507-S & LEP-22516-E Pump

ATZ Applied Technologies Inc
534 Salzburg Dr, Ottawa, ON K4A 0C6
613.836.3940
www.atzappliedtechnologies.com

ATZ PUMP MAINTENANCE & TROUBLESHOOTING GUIDE

Thank you for purchasing an ATZ pump. We stand by our motto that we make all of our products ***simple, reliable and durable***, and trust that you will be very pleased with your purchase. It is our hope that this guide will prove useful for any maintenance and troubleshooting issues that may arise in the field. If, however, any questions remain or are not answered in this guide, please do not hesitate to contact us directly at info@atzappliedtechnologies.com or **1-613-836-3940**.

This guide has three sections:

Section I: Pump Components and Required Tools

Section II: Maintenance Tasks

Section III: Troubleshooting

SECTION I: PUMP COMPONENTS AND REQUIRED TOOLS

PUMP COMPONENTS LIST:

1) Complete Pump Assembly with Sub-assemblies..... Appendix A
2) Backplate and Motor Assembly..... Appendix B
3) Drop Assembly..... Appendix C
4) Linkage Assembly..... Appendix D
5) Lower Pump Assembly..... Appendix E
6) Pump Head Assembly..... Appendix F
7) Well Cap Assembly..... Appendix G
8) Cover Assembly
9) Control Panel
10) Safety board

TOOLS REQUIRED:

Maintenance and troubleshooting tasks may require the use of the following tools:

1) Channel lock pliers
2) Vice Grips or 2 pipe wrenches
3) Set of imperial combination wrenches
4) Set of imperial Allen keys
5) WD-40, Jig-a-loo or equivalent
6) All required Personal Protective Equipment Including Gas Monitors

SECTION II: MAINTENANCE

The maintenance requirements for our pumps fall under three main areas: seals and bearings, motor components and lower assembly components.

SEALS

Seals are found both in the pump head and piston assembly. The length of time between seal replacement can vary greatly with amount of use and the nature of the leachate being pumped. Most clients begin maintenance on the seals within three to four months of continuous 24/7 pumping. These signs will help you know when seals need to be replaced:

1. For piston seals: when output drops appreciably

2. For pump head seals: when significant amounts of leachate leaks from the indicator hole on the pump head

PISTON SEALS

The piston assembly, found in Appendix E, includes two U-cup straight seals. When pumping particulate filled leachate, the average life expectancy for these two piston seals is 3-4 months, whereas when pumping clean water expect at least 12-18 months before any changes need to be made.

Piston seal wear is indicated by an appreciable decrease in pumping output when other causes are ruled out. Even if the piston seals wear, the pump should continue to operate and continue to pump liquid.

In order to replace the U-cup seals on the piston, the lower pump assembly must be pulled from the well. Upon removal of the old seals, the new piston U-cup seals **MUST** be installed with the **open end of "U" facing UPWARD.**

PUMP HEAD SEALS

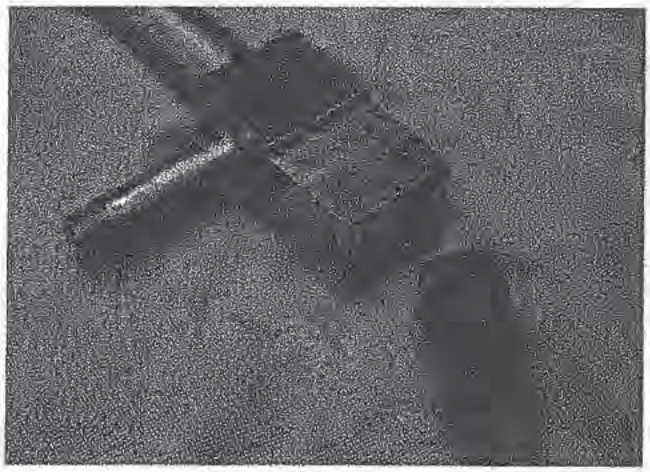

The pump head assembly, found in Appendix F, includes our seal body as well as the seal body pin. The seal body assembly includes five seals:
- 2 x O-Rings,
- 1 x Rod Wiper and
- 2 x U-Cup straight seals.

The seal body pin includes 2 x O-Ring seals. When pumping particulate filled leachate, the average life expectancy for these seals is 3-4 months. When pumping cleaner water expect at least 12-18 months before any seal replacements need to be made.

The seal body can be replaced as a complete assembly or replacement seal kits are also available. Many customers keep spare complete seal body assemblies on hand to be easily exchanged in the field, with additional seal kits to replace worn seals once the seal bodies are removed from the field. If seals are to be installed on site, a blunted hook tool may aid the process. Take care not to puncture seals during installation.

The pump head and seal body incorporate a tell-tale seal wear indicator port which alerts technicians to the failure of the lower set of seals inside the seal body. This same port also accommodates the expansion of pumped liquid under freezing conditions, thereby preventing failure or destruction of the pump head assembly.

SEAL BODY SUB-ASSEMBLY

(Rod wiper configuration shown)

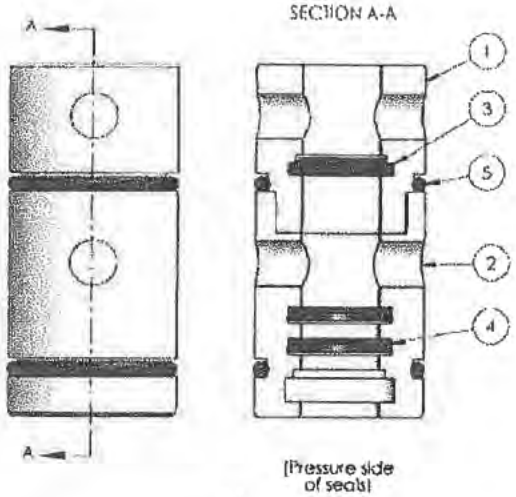

In order to replace the H-Wiper and U-cup seals in the seal body, it must be removed from the pump head and unscrewed (in half). For proper function of the seal body, upon removal of the old seals the new seals **MUST** be installed following the orientation diagram found above as well as in Appendix F.

BEARINGS

Bearings are found both in the backplate and linkage assembly. The length of time between bearing replacement can vary greatly with amount of use and the nature of the leachate being pumped. Most clients only perform maintenance on the bearings upon indication of a problem, and usually only the bottom linear bearing and exterior dog bone bearing will ever require replacement. These signs will help you know when bearings need to be replaced:

1. For backplate linear bearings: when there is significant wear within the housing, as evidenced by significant lateral movement of the insert within the mounting pillow block.

2. For linkage assembly bearings: when they show significant wear, as evidenced by significant lateral or sloppiness within the bearing assembly.

MOTOR

AC Motor life expectancy under continuous operation is estimated by the manufacturer to be 2 years, influenced by applied motor loads and operating conditions.

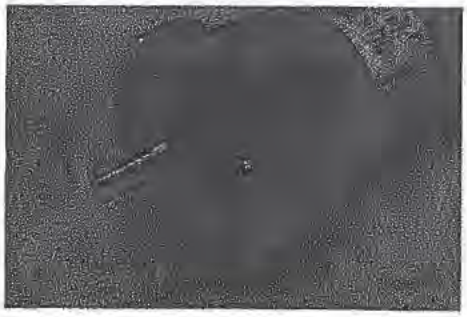

DC Motor life expectancy under continuous operation is estimated by the manufacturer to be 1.5 years, influenced by applied motor loads and operating conditions. Our DC motors include brushes, which may require replacement after a certain number of operating hours. Motor brush kits are available.

PART NUMBERS:
BRUSH FOR GPP2424PC 12VDC MOTOR: BBR1087SP
BRUSH FOR GPP2530 90VDC MOTOR: BP5040BP01

LOWER PUMP ASSEMBLY

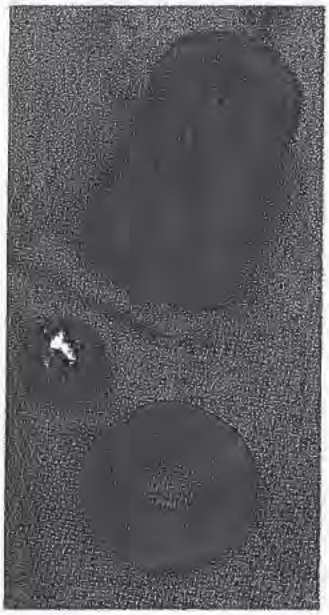

The lower pump assembly includes the PVC Piston and 2 x 316 series stainless steel balls, which may experience wear over time, especially with highly abrasive content in the leachate.

One of the best methods to reduce wear on the lower pump assembly and seals is through the use of our optional INTAKE SCREEN FILTER (Part # D021). This simple slotted PVC pipe extends from the lower seat of the pump and provides an initial filtration of larger particles so as to mitigate the abrasive elements entering the pump.

Should there be a high percentage of abrasive content in the leachate, such as sand or silica, we offer an optional stainless steel version of our piston seat.

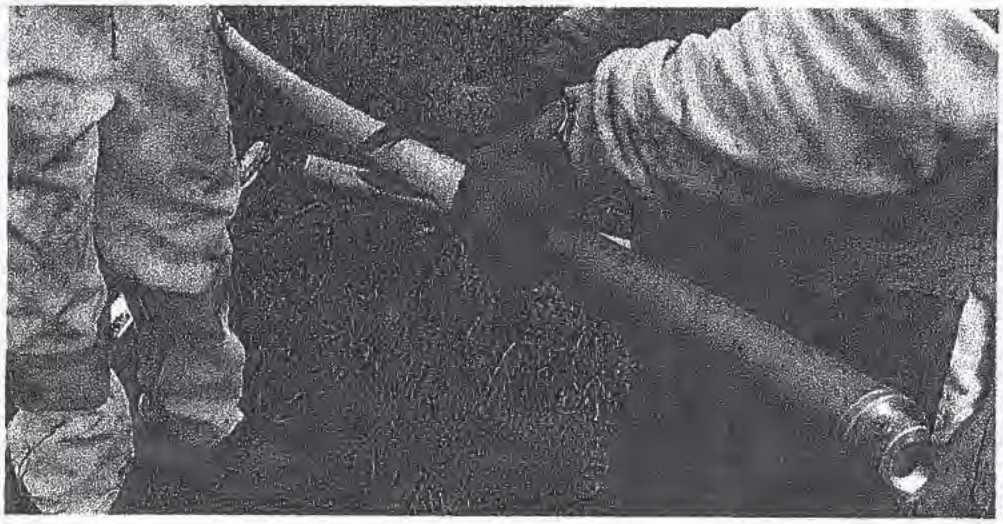

SECTION III – TROUBLESHOOTING

SYMPTOM	POSSIBLE CAUSES	SOLUTION
PUMP AND MOTOR NOT OPERATING	- Overload status on motor	- Check that overload is set to desired level. Adjust if needed.
	- No power	- Check that power supply is live and that all connections are sound.
PUMP OPERATING, BUT NOT PUMPING FLUID	- Air bubble in line (especially if right after install/re-install)	- Turn the pump off, manually move the push rod through a full stroke, restart.
	- Piston has disconnected from piston rod	- Pull pump, reconnect piston. Use marine grade silicone to seal threads
	- Stainless steel ball is stuck on piston seat	- Pull pump, clean and inspect piston
PUMP OPERATING BUT NOT PUMPING FLUID, DISCHARGE LINE HAS VACUUM AND IS SUCKING AIR IN	- Well is dry or pump depth is above liquid level	- Lower pump depth setting. Turn the pump off, remove the well cap and drive components, install a 5 or 10 foot length of drop assembly to lower pump depth setting.
	- Crack or disconnection in drop assembly, either fiberglass drop shafts or PVC	- Pull pump. Inspect drop assembly for disconnections, cracks
	- Piston has disconnected from piston rod	- Pull pump, reconnect piston. Use marine grade silicone to seal threads.
	- Intake filter or lower pump assembly clogged	- Pull pump. Remove build up/clog. Replace intake filter if necessary.
PUMP OPERATING, BUT OUTPUT IS MINIMAL	- PVC piston seals have worn	- Pull pump, replace seals.
	- Crack or leak in drop assembly, either fiberglass drop shafts or PVC	- Pull pump. Inspect drop assembly for disconnections, cracks, over-tightening.

	- Intake filter or lower pump assembly clogged	- Pull pump. Remove build up/clog. Replace intake filter if necessary.
LEACHATE IS LEAKING FROM SEAL WEAR INDICATOR HOLE ON PUMP HEAD ASSEMBLY	- Seals inside the seal body need to be replaced	- Remove seal body assembly from pump head and inspect. If worn, install new seals. Replacement seal kits and seal body assemblies are available through ATZ.
MOTOR OPERATING ABNORMALLY	- On DC motors: brush replacement needed	- Replacement brushes can be ordered through ATZ or your local Authorized Baldor motor repair shop.
	- On DC motors: oil leak, gasket failure	- If motor is within one year of installation, warranty replacement may be possible. Please contact us.
PUMP SHUTS OFF OR WILL NOT OPERATE AT FULL SPEED	- Discharge line is frozen	- Heat tracing and insulation is recommended in colder climates, as well as keeping the pump operational 24/7 to keep lines from freezing.
	- Blockage in discharge line	- Locate blockage in discharge line and remove. Lower the overload status adjustment for the motor.
PVC DROP PIPE CRACKS OR BREAKS AT FIRST COUPLING OR AT PUMP HEAD ASSEMBLY	- Blockage in discharge line	- Locate blockage in discharge line and remove. Lower the overload status adjustment for the motor.
	- Pump has bottomed out	- Pull pump and inspect. Upon re-installation ensure to raise the push rod up approximately 1 inch from the lowest point ensuring the PVC piston does not bottom out during operation.
	- Intake filter or lower pump assembly clogged	- Pull pump. Remove build up/clog. Replace intake filter if necessary. Lower the overload status adjustment for the motor.

ABNORMALLY FAST SEAL FAILURE, FAST WEAR ON BEARINGS	- Alignment is not linear. Drop assembly may be crooked/cross-threaded at couplings. Backplate or push rod may be bent	- Pull pump, inspect drop assembly for cross-threading, backplate and push rod for warping/bending.
	- Push rod may be worn through at contact points in linear bearings	- Reset rod clamp and linkage on a new section of push rod, ensuring final clamping onto the push rod is only done when linkage is at bottom of stroke and push rod pulled up from lowest point in stroke by at least 1".
DROP ASSEMBLY DIFFICULT TO REMOVE FROM WELL	- Well may be pinched or crooked, drop assembly may be caught	- Move drop assembly back and forth to dislodge. If not successful, remove as much of the drop assembly as possible, and pull upwards with force on fiberglass drop shaft to eventually disconnect piston from lower pump assembly. Fish lower assembly out if possible, if not, it may be left in the well and another pump installed at a higher depth setting
LINKAGE ASSEMBLY STRUGGLES TO MAKE FULL ROTATION	- Dog Bone bearing may be worn	- Replacement bearings as well as dog bones can be ordered through ATZ. Bearings can be pressed in and replaced on site using Loctite 609
	- Push rod may be worn through at contact points in linear bearing	- Reset rod clamp and linkage on a new section of push rod, ensuring final clamping onto the push rod is only done when linkage is at bottom of stroke and push rod pulled up at least 1"

APPENDICES

APPENDIX A

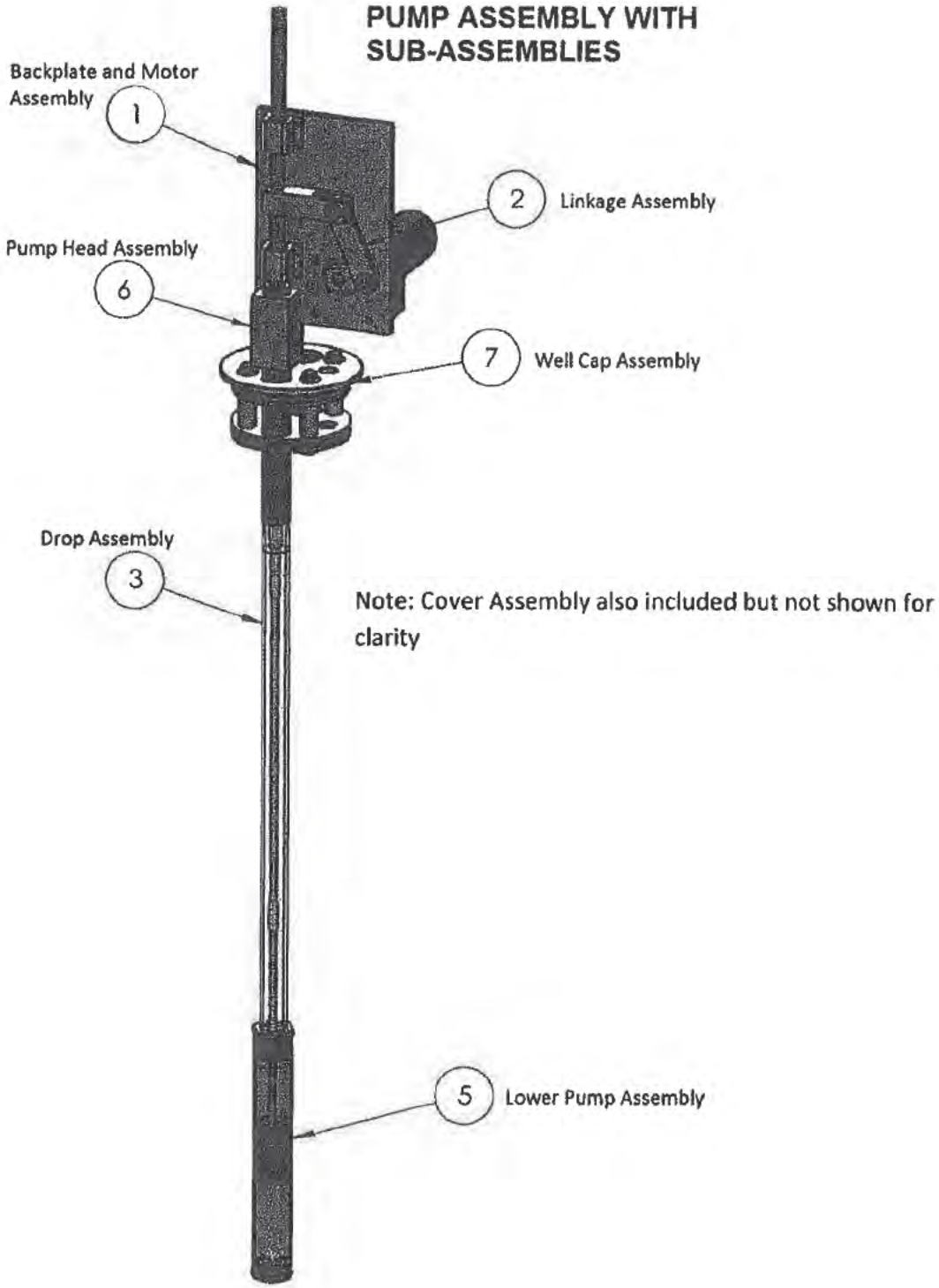
PUMP ASSEMBLY WITH SUB-ASSEMBLIES
Backplate and Motor Assembly
1
2
Linkage Assembly
Pump Head Assembly
6
7
Well Cap Assembly
Drop Assembly
3
Note: Cover Assembly also included but not shown for clarity
5
Lower Pump Assembly

APPENDIX B

BACKPLATE AND MOTOR ASSEMBLY

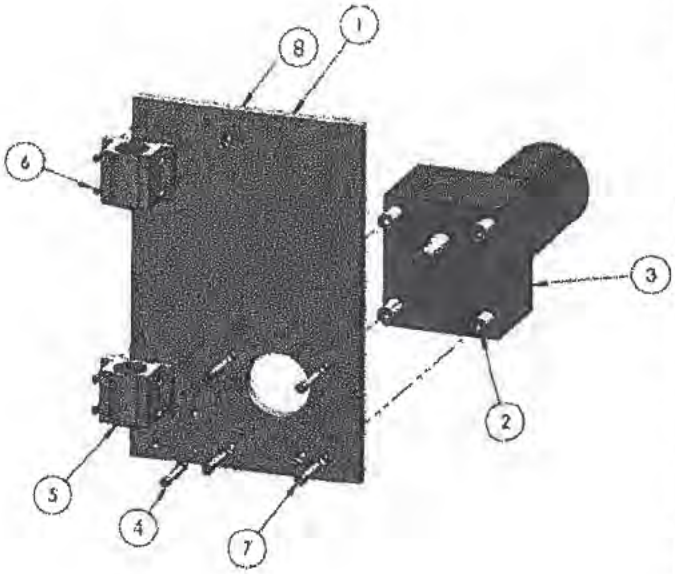

OUR PART #	ITEM NO.	PART NAME	QTY
P015	1	Backplate – Aluminum	1
P005	2	Motor Spacer - RAE	3
P008	2	Motor Spacer - Baldor	4
P006	3	Motor – RAE	1
P009	3	Motor - Baldor	1
F7	4	18-8 1/4 -20 x 0.75" Bolts to Pump Head	4
F19	4	18-8 ¼ Hi Collar Lock Washer	4
P010-A	5	P12E Linear Bearing – Soft Shaft Push Rod	2
F6	6	18-8 8-32 ¾" Linear Bearing Bolts	8
F6-A	6	#8 Lock Washer for Linear Bearing Bolts	8
F4	7	¼ - 20 Threaded Rod Motor Studs - RAE	3
F5	7	¼ - 28 Threaded Rod Motor Studs - Baldor	4
F23	7	¼ - 20 Hex Nut - RAE	3
F22	7	¼ - 28 Hex Nut – Baldor	4
C010-3	8	Cover Stand Offs	2
F26	8	18-8 ¼ - 20 x ½"Button Socket Head Cover Bolts	2
F7	8	18-8 ¼ - 20 x ¾" SHCS Cover Stand Off Bolts	2

APPENDIX C

DROP ASSEMBLY

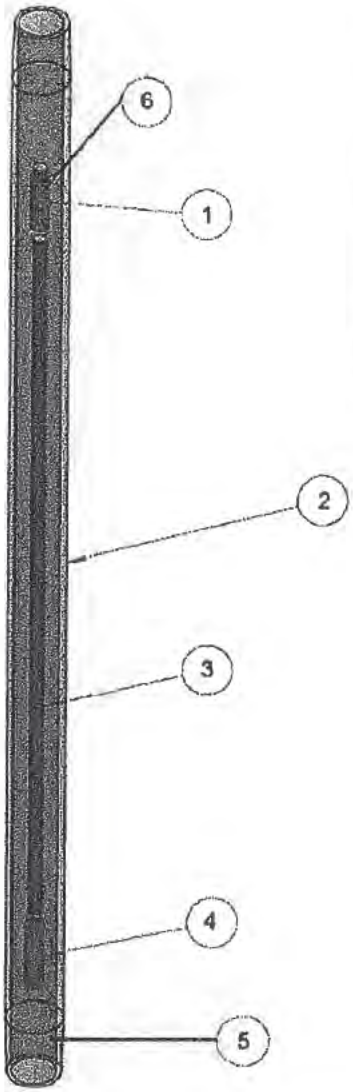

OUR PART#	ITEM NO.	PART NAME	QTY
D004	1	Shaft Coupling – Male	1
D001	2	1-1/4" PVC Drop Pipe	1
D003	3	Fiberglass Drop Shaft	1
D005	4	Shaft Coupling – Female	1
D002	5	1-1/4" PVC Coupling	1
F21	6	3/32 x ½" Spring/Roll Pin	2
Note: 10' or 5' lengths are available			

APPENDIX D

LINKAGE ASSEMBLY

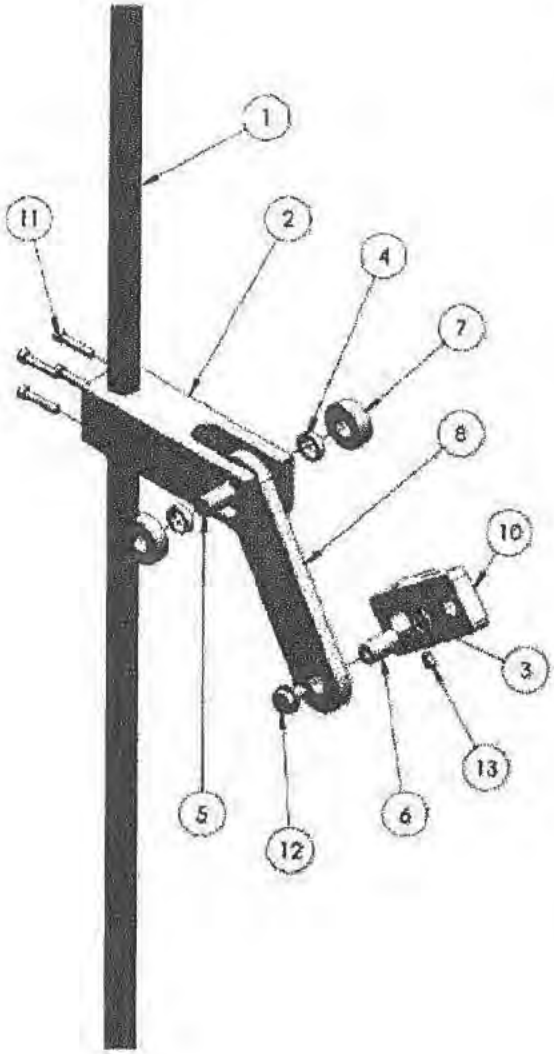

OUR PART #	ITEM NO.	PART NAME	QTY
L0015	1	Push Rod – Soft Shaft	1
L004	2	Rod Clamp	1
L010	3	Crank Spacer	1
L009	4	Rod Clamp Spacer	2
L008	5	Dog Bone Pressfit Pin	1
L007	6	Crank Pressfit Pin	1
L005	7	1616 Rotary Bearing	3
L003	8	Dog Bone	1
L002	9	Crank Key (not shown, supplied with motor	1
L001	10	Crank – RAE	1
L011	10	Crank – Baldor	1
F3	11	18-8 10-24 x 1" Rod Clamp Bolt	4
F3-A	11	#10 Lock Washer	4
F1	12	5/16-18 x 0.4375" Hex Lower Dog Bone Bolt	1
F17	12	18-8 5/16 Flat Washer	1
F2	13	¼ -20 X 0.375" Crank Set Screw	1

APPENDIX E

LOWER PUMP ASSEMBLY

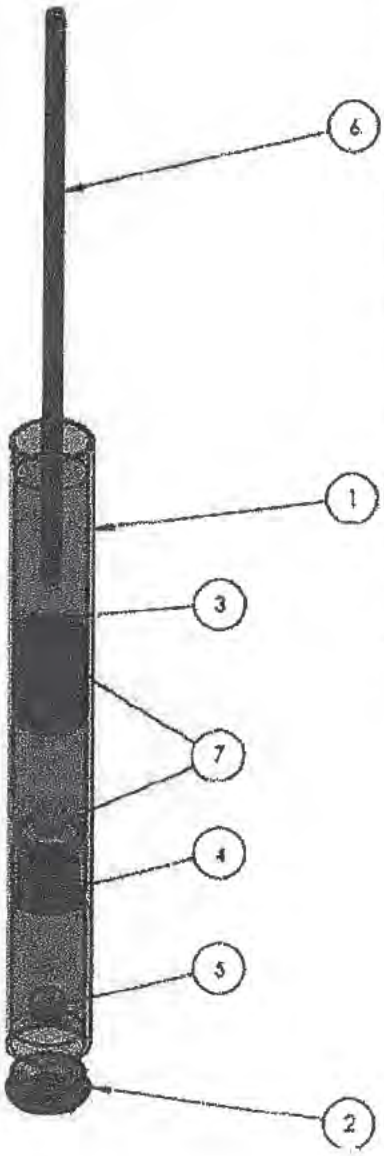

OUR PART #	ITEM NO.	PART NAME	QTY
D007	1	Cylinder Body	1
D008	2	Cylinder Seat	1
D011	3	Piston Body	1
D010	4	Piston Seat	1
D009	5	Stainless Steel ¾" Ball	2
D006	6	Piston Rod	1
D012	7	Piston Body U-Cup Seal	2
D021	8	1-1/4" SCH 80 Slotted PVC Screen Intake Filter (not shown)	1
Note: 150 Pump Model shown, part #s vary with larger 225 pump			

APPENDIX F

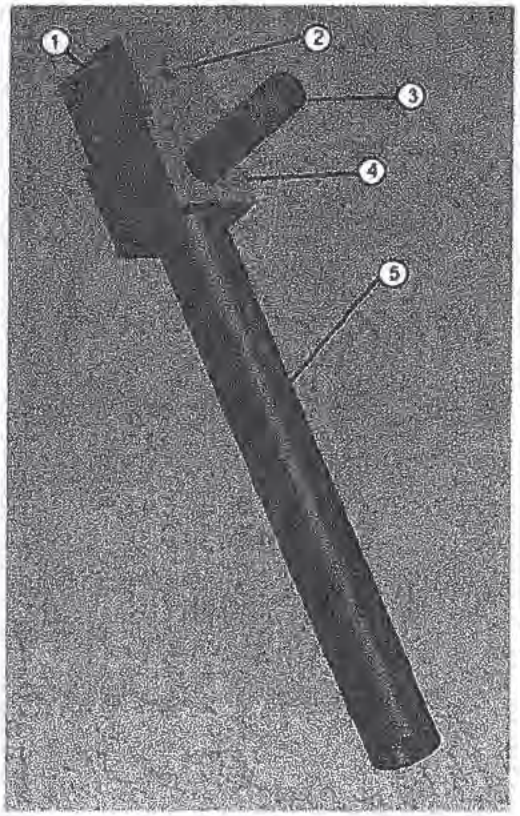

PUMP HEAD ASSEMBLY

OUR PART #	ITEM NO	PART NAME	QTY
W002	1	Seal Body – Threaded	1
S1	3sub	H-Wiper Seal OR	2
	3sub	Rod Wiper Seal	1
S2	4sub	U-Cup Seal 626-210	2
S3	5sub	O-Ring for Seal Body 1-220	2
W003	2	Seal Body Pin (not shown)	1
S4	2	O-Ring for Seal Body Pin 1-010 (not shown)	2
F12	3	¾" NPT Pipe Nipple	1
W001	4	Interface Block/Body	1
P011	5	Drop Tube Connector	1

SEAL BODY SUB-ASSEMBLY

(Rod wiper configuration shown)

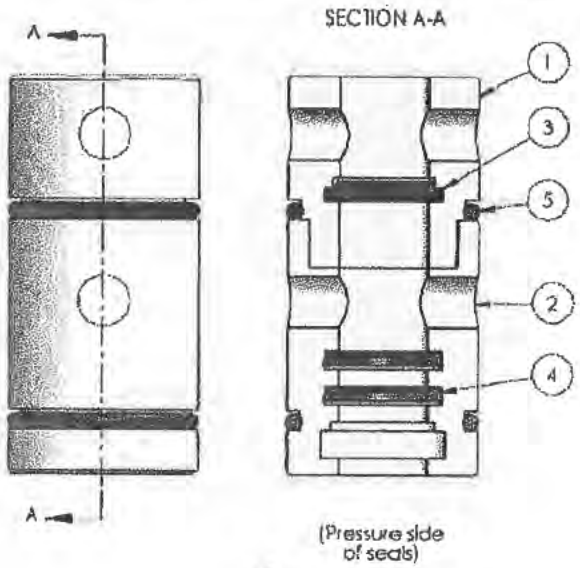

APPENDIX G

WELL CAP ASSEMBLY

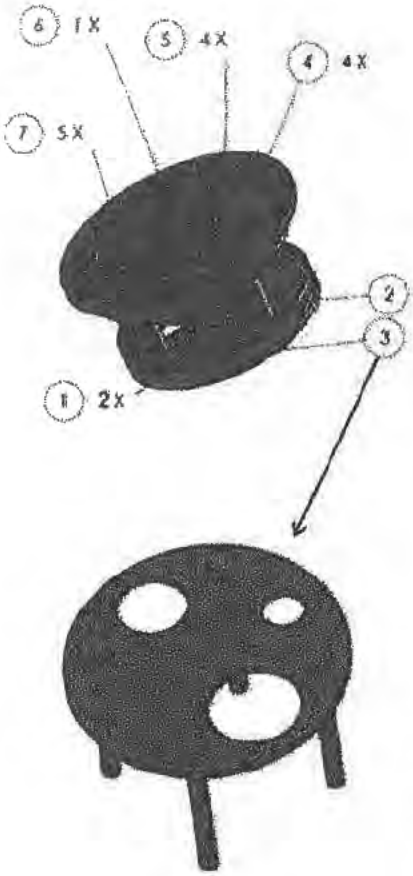

8" WELL CAP ASSEMBLY			
OUR PART #	ITEM NO.	PART NAME	QTY
W0003	1	8" Clamp Plate	2
F16	2	¾" x 1" x 2" Steel Spacer	4
W0001-B	3	8" Clamp Plate with 4 x welded bolts	1
F10	4	18-8 ½" flat washer	4
F11	5	1/2" - 13 Brass Finishing Hex Nut	4
W0002	6	8" Top Plate	1
W0050	7	8" Well Cap Gasket	5
8" WELL CAP ASSEMBLY, 3" GAS PIPE			
OUR PART #	ITEM NO.	PART NAME	QTY
WC0072	1	8" Clamp Plate, 3" GP	2
F16	2	¾" x 1" x 2" Steel Spacer	4
WC0073-B	3	8" Clamp Plate, 3" GP with 4 x welded bolts	1
F10	4	18-8 ½" flat washer	4
F11	5	1/2" - 13 Brass Finishing Hex Nut	4
WC0071	6	8" Top Plate, 3" GP	1
WC0070	7	8" Well Cap Gasket, 3" GP	5
6" WELL CAP ASSEMBLY			
OUR PART #	ITEM NO.	PART NAME	QTY
WC0061	1	6" Clamp Plate	2
F16	2	¾" x 1" x 2" Steel Spacer	4
WC004-B	3	6" Clamp Plate with 4 x welded bolts	1
F10	4	18-8 ½" flat washer	4
F11	5	1/2" - 13 Brass Finishing Hex Nut	4
WC0062	6	6" Top Plate	1
	7	6" Well Cap Gasket	5
4" WELL CAP ASSEMBLY			
OUR PART #	ITEM NO.	PART NAME	QTY
WC0043	1	4" Clamp Plate	2
F16-B	2	1/2" x 1" x 2" Steel Spacer	4
WC0040-B	3	4" Clamp Plate with 4 x welded bolts	1
F10-B	4	18-8 3/8" flat washer	4
F11-B	5	3/8" - 16 Brass Finishing Hex Nut	4
WC0041	6	4" Top Plate	1
WC0044	7	4" Well Cap Gasket	5

APPENDIX B

ANALYZER CALIBRATION FORMS

METER CALIBRATION FORM

DATE: _____

Meter Date and Time Match ☐ Yes ☐ No

Technician: _____

Meter Serial No: _____

Meter Type: _____

Start Time: _____

End Time: _____

Weather Conditions: _____

Calibration Number 1

Time: _____ Temp: _____

Lot #: 50% CH_4/35% CO_2/Balance Gas _____
Lot #: 15% CH_4/15% CO_2/Balance Gas _____
Lot #: 4% O_2/Balance Gas _____

Calibration Number 2

Time: _____ Temp: _____

Lot #: 50% CH_4/35% CO_2/Balance Gas _____
Lot #: 15% CH_4/15% CO_2/Balance Gas _____
Lot #: 4% O_2/Balance Gas _____

Calibration Number 3

Time: _____ Temp: _____

Lot #: 50% CH_4/35% CO_2/Balance Gas _____
Lot #: 15% CH_4/15% CO_2/Balance Gas _____
Lot #: 4% O_2/Balance Gas _____

Field Technician Signature: _____ Date: _____

APPENDIX C

SURFACE EMISSION MONITORING FORMS

CALIBRATION PRECISION TEST RECORD

LANDFILL NAME: Moretown Landfill, Inc.

DATE: _____ **EXPIRATION DATE:** _____

TIME: _____

INSTRUMENT MAKE: Photovac **MODEL:** MicroFiD

CALIBRATION GAS STANDARD: 500 ppm (STD)

MEASUREMENT #1:

Meter Reading for Zero Air: _____ ppm

Meter Reading for Calibration Gas: _____ ppm

MEASUREMENT #2:

Meter Reading for Zero Air: _____ ppm

Meter Reading for Calibration Gas: _____ ppm

MEASUREMENT #3:

Meter Reading for Zero Air: _____ ppm

Meter Reading for Calibration Gas: _____ ppm

CALCULATE PRECISION:

$$\frac{[\ ] + [\ ] + [\ ]}{3} \times \frac{1}{500} \times \frac{100}{1}$$

= _____ (should be ≤ 10 percent of the calibration gas value)

PERFORMED BY: _____

Refer to Method 21 Section 8.1.2

RESPONSE TIME TEST RECORD

LANDFILL NAME: Moretown Landfill, Inc.

DATE: _____

TIME: _____

INSTRUMENT MAKE: Photovac MODEL: MicroFiD

MEASUREMENT #1:

Stabilized Reading Using Calibration Gas: _____ ppm

90% of the Stabilized Reading: = 0 ppm

Time to reach 90% of Stabilized Reading After Switching from Zero Air to Calibration Gas: _____ seconds (1)

MEASUREMENT #2:

Stabilized Reading Using Calibration Gas: _____ ppm

90% of the Stabilized Reading: = 0 ppm

Time to reach 90% of Stabilized Reading After Switching from Zero Air to Calibration Gas: _____ seconds (2)

MEASUREMENT #3:

Stabilized Reading Using Calibration Gas: _____ ppm

90% of the Stabilized Reading: = 0 ppm

Time to reach 90% of Stabilized Reading After Switching from Zero Air to Calibration Gas: _____ seconds (3)

CALCULATE RESPONSE TIME:

$$\frac{(1)+(2)+(3)}{3}$$

= _____ SECONDS (MUST BE LESS THAN 30 SECONDS)

PERFORMED BY: _____

Refer to Method 21 Section 8.1.3

CALIBRATION PROCEDURE, BACKGROUND DETERMINATION, AND POST-MONITORING CALIBRATION CHECK

LANDFILL NAME: Moretown Landfill, Inc.

DATE: _____

TIME: _____

INSTRUMENT MAKE: Photovac **MODEL:** MicroFiD

Calibration Procedure (40 CFR 60.755(d))

1. Allow instrument to warm up according to manufacturer's instructions.
2. Introduce calibration gas to probe.

   Calibration gas standard: 500 ppm

   Stable instrument reading: _____ ppm
3. Follow instrument calibration procedure per the manufacturer's instructions.

Background Determination Procedure (40 CFR 60.755(c)(2))

1. Upwind Reading (highest in 30 seconds): _____ ppm (1)
2. Downwind Reading (highest in 30 seconds): _____ ppm (2)

Calculate Background Value:

$$\frac{(1) + (2)}{2}$$

Background = _____ ppm

Post Monitoring Calibration Check

1. Zero Air: _____ ppm
2. 500 ppm: _____ ppm

PERFORMED BY: _____

Exceedance and Monitoring Log

LANDFILL NAME: Moretown Landfill, Inc.

INITIAL MONITORING EVENT		10 Day Remonitor Event (required)			20 day Remonitor Event (if needed)			30 Day Remonitor Event (required)		
Exceedance Location No.	Monitoring Date	Monitoring Date	No Ex. <250 ppm	Ex. >250 ppm	Monitoring Date	No Ex. <250 ppm	Ex. >250 ppm	Monitoring Date	No Ex. <250 ppm	Ex. >250 ppm

APPENDIX D

STARTUP, SHUTDOWN, MALFUNCTION FORM

Startup/Shutdown/Malfunction Report Form
Moretown Landfill, Inc.

Section 1 - All Events

Type of Event	Military Time Date/Time Start	Date/Time End	Duration (hours)	Event Code (see back of form)	SOP Followed? Yes	No
Startup						
Shutdown						
Malfunction					Complete section 2 Below	

Date Form Filled Out: _____ Signature: _____

* Standard Operating Procedure (SOP) for Flare Startups (Manual & Automatic) and Shutdowns are provided in SSM Plan

** If SOP in SSM Plan was not followed, notify personnel on "Contact List".

Section 2 - Malfunction Events Only

		√ Check one of the following for each step:	
Step	Corrective Action Procedures for All Malfunctions	Procedure Completed	Procedure Not Applicable
1.	Determine if landfill gas is being released to the air (can you smell landfill gas, or measure/detect gas flow?)		
2.	If landfill gas is being released to the air, notify personnel on "Contact List".		
3.	Determine if the malfunction is causing an unsafe operating condition (air entering landfill or piping, smoking, vibration, or other problem), which may harm people, the environment, or the landfill gas control equipment.		
4.	If unsafe operating condition exists, or landfill gas is being released to the air, stop (if possible) landfill gas flow.		
5.	If control device or other system component is shutdown, follow Shutdown SOP and complete Section 1 0 "Shutdown".		
6.	Determine if other personnel/resource (qualified technician, electrician, consultant or other) are needed for malfunction diagnosis.		
7.	If additional personnel needed, notify qualified personnel: a. Record contact name, date, and time: b. Contact site representative with information recorded in #7.a.		
8.	Start malfunction diagnosis.		
9.	Determine if other resources are needed to fix the malfunction (qualified technician, electrician, contractor, on-site resources, manufacturer's representative, or other).		
10.	If additional resources needed, contact qualified resource: a. Record contact name, date, and time: _____ b. Contact site representative with information recorded in #10.a.		
11.	Fix the malfunction.		
12.	Once the malfunction is fixed, re-start the system per SOP if it had been shut down, and record start-up times and dates in boxes in Section 1 of this form.		
13.	Record date that malfunction occurred, date that malfunction was repaired, and total time that system was out of ervice in boxes in Section 1 of this form.		
14.	Sign this form and place it in the Start-up, Shutdown, Malfunction file.		
15.	If the procedures listed above were not followed, notify personnel on "Contact List".		

For Start-ups and Shutdowns

Startup: *The setting in operation of an affected source or portion of an affected source for any purpose.*

Code	Event
1	Maintenance
2	Suspected Collection System Malfunction
3	Suspected Control Device Malfunction
4	Suspected Continuous Monitoring System Malfunction (Temperature/Flow/Other)
5	Training
6	Gas System Construction/Expansion
7	Suspected Treatment System Malfunction
99	Other (Describe) _____

For Malfunctions

Malfunction: *Any sudden, infrequent and not reasonably preventable failure of air pollution control equipment, process equipment, or a process to operate in a normal or usual manner. Failures that are caused in part by poor maintenance or careless operation are not malfunctions.*

Code	Event
10	Automatic shutdown of control device by designed protective systems
11	Autodialer Callout
12	Shutdown alarms that result in the device not shutting down
13	Unalarmed shutdown
14	Control Device Smoking
15	Inspection identified malfunction
16	Loss of power - utility down
17	Loss of power - unknown
18	Damaged Well, Header, or Lateral Piping
19	Leaks at wellheads, valves, flanges, test ports, seals, couplings, etc.
20	Condensate knock-out problems
21	Collection piping blockages
22	Problems due to settlement
23	Loss of phase
24	Blower overload condition
25	Blower bearing failure
26	Broken belts (if belt-drive) or broken coupling (if direct-drive) in blower
27	Continuous Monitoring System Malfunction - Thermocouple
28	Continuous Monitoring System Malfunction - UV Scanner
29	Continuous Monitoring System Malfunction - Flow Monitor
30	Continuous Monitoring System Malfunction - Flow Recorder
31	Continuous Monitoring System Malfunction - Temperature Recorder
32	Act of God (i.e., lightening, wind, etc.)
99	Other (Describe) _____

APPENDIX E

WELL ASSESSMENT AND CONDITION REPORT FORM

Well Assessment and Condition Report

Well ID:
Date:
Time:
Technician:

Yes	No	N/A	
			Is the well labeled?
			Is the well head remote?
			Is the well head in good condition?
			Well head size/type _____
			Are the well head ports in good condition?
			Is the valve in good condition?
			Is the well Kanaflex in good condition?
			Are all connections points in good condition? (i.e. Ferncos and power clamps)
			Is their air and force main present?
			Is their a pump in this well?
			Is the pump operational?
			Pump Counter # _____
			Is the well casing in good condition?
			Well casing size/type _____
			Is the bore seal in good condition? (ground Soil)
			Are their any miscellaneous repairs that need performed?

Drill logs

Solid _____ ft.

Perforation _____ ft.

Above ground _____ ft.

DTL _____ ft.

DTB _____ ft.

Additional Comments: _____

_____

_____

_____

_____

_____

Technician Signature: _____

APPENDIX F

FLARE FORMS

Moretown Landfill, Inc.

LFG Blower / Flare Monitoring Data

Technician(s): _____

Gas Instrument Type: _____ **Instrument Model No:** _____

Instrument Serial #: _____

Date Last Calibrated: _____ **Date of Monitoring:** _____

FLARE 1

Before Tuning	CH4 %	CO2 %	O2 %	Bal. Gas %	Press./Vac.	Temp.	Flow	Comments
Blower In								
Blower Out								
After Tuning	**CH4 %**	**CO2 %**	**O2 %**	**Bal. Gas %**	**Press./Vac.**	**Temp.**	**Flow**	**Comments**
Blower In								
Blower Out								

Blower Data:	Hours	Amps	Bearing Temp
Blower #1			
Blower #2			

Flare Data:	
Flare Temp (°F)	
Total Flow (SCFM):	
Propane Vol (%)	
Nitrogen (PSI)	

FLARE 2

Before Tuning	CH4 %	CO2 %	O2 %	Bal. Gas %	Press./Vac.	Temp.	Flow	Comments
Blower In								
Blower Out								
After Tuning	**CH4 %**	**CO2 %**	**O2 %**	**Bal. Gas %**	**Press./Vac.**	**Temp.**	**Flow**	**Comments**
Blower In								
Blower Out								

Blower Data:	Hours	Amps	Bearing Temp
Blower #1			
Blower #2			

Flare Data:	
Flare Temp (°F)	
Total Flow (SCFM):	
Propane Vol (%)	
Nitrogen (PSI)	

Maintenance Checks:

Technician(s): _____ Date:

	Yes	No	N/A	Comments
Check flare chart recorder paper or data card				
Check and replace flare control panel indicator light bulbs				
Check flare auto dial-out system for operation				
Inspect flare electrical panels for damage or leaks				
Check and repair any flare control panel instrumentation				
Check pilot propane supply, adjust supply pressure as needed				
Inspect & adjust blower (condition, alignment, tension)				
Check bearing temperatures (grease as required)				
Check ventilation openings of the blower motors				
Inspect all piping, fittings, valves, and seals for leaks or breaks				
Drain blower casing if not automatic				
Drain base of flare stack if not automatic				
Inspect flare flame for visible emissions, smoke or problems				
Inspect and/or repair pressure gauges and temperature probes				
Inspect and/or repair sample ports on flare skid				
Check liquid level of KOP & proper operation of drainage system				
Check operation of heat tape and integrity of insulation (winter)				

Comments:

APPENDIX G

LIQUID LEVEL MEASUREMENT FORM

Moretown Landfill, Inc.
Liquid Level Measurements

Date of Liquid Level Measuements: ______________________________

Well ID	DRILL LOGS						LIQUID LEVEL MEASUREMENTS					PUMPS		
	Original Total Depth (ft)	Length of Solid Pipe (ft)	Length of Perfs (ft)	Stick-up (ft)	Depth to Bottom (ft)	% Original Depth	Depth to Liquid (ft)	Total Liquid in Well (ft)	Total Available Perfs (ft)	Available Perforations (%)	Blocked Perforations (%)	Pump Installed (Y or N)	Cycle Count	Gallons (1 cycle=1/3 gallon)

Entry columns
Column includes formula.. DO NOT CHANGE

REFER TO CQA REPORTS FOR DRILL LOGS

APPENDIX H

COVER INTEGRITY FORM

Moretown Landfill, Inc. Monthly Cover Integrity Form

Date	
Technician:	

No	Issue	Location	Recommended Repair	Date Repaired

Technician Signiture:
GOM Signiture:

Site Manager Signiture:

APPENDIX I

LANDFILL GAS WELL PUMP MAINTENANCE FORM

MORETOWN LANDFILL, INC.
Pneumatic Pump Maintenance Form

Site Information	
Technician	
Date	
Well ID:	
Pump Type	
Pump ID	
Well Diameter	
Well Construction	HDPE PVC
Depth to Liquid (ft)	
Well Depth (ft)	
Drill Log Depth (ft)	
Pump Set Depth (ft)	
Pump Operational	Yes or No

Equipment Inspection			
Equipment/Materials	OK	Needs Service	Comments
Counter			Count:
Wellhead with compression fittings			
Data Module			
Hoses			
Hose Barbs			
Clamps			
Quick Connect Fittings			
Regulator			Setpoint (psi):
Regulator Particulat Filter			
Condensation Trap			

Pump Inspection

Task	OK	Needs Service	Comments
Perform Flow Rate Inspection (Properly dispose of liquid)			
Inspect Fluid Inlet Screen			
Disassemble pump and inspect for corrosion or buildup			
Disassemble Inlet Check Valve and Inspect			
Disassemble Outlet Check Valve and Inspect			
Determine if any part of the float material itself can contact the discharge pipe. Move each end of the float back and forth, sideways, to ensure that the pins prevent float contact.			
Inspect Lever Pivot Wear (should be less than 1/32 movement)			

Comments:

Parts Required for Repair/Replacement:

Signature:

APPENDIX J

GCCS MAINTENANCE CALENDAR

Moretown Landfill, Inc.

Landfill Gas Monitoring Requirements

Monitoring Requirements

Description	Requirement	Frequency	Start Date	End Date	Date Completed	Comments
Flow Readings	Continuous flow readings are required for the GHG reporting rule and for Carbon Credits (15-minute intervals).	Continuous	Start of System	N/A	Ongoing	The Yokogawa is set to record a flow readings less than every 15 minutes.
Methane Concentration	Weekly measurements of the methane concentration at the blower outlet are required by the GHG Reporting Rule.	Weekly	Start of System	N/A	Ongoing	Measurements of the LFG concentrations at the flare on a weekly basis.

Moretown Landfill, Inc.

CALENDAR AND FLARE MAINTENANCE SCHEDULE

Components	Frequency	Date Last Completed	Due Date	Date Completed
Condensate Knock-Out Pot				
Inspect Internal Coating, cover gasket and clean demister pad	Annual			
Retighten cover bolts	Annual			
LFG Blower				
Re-lubricate bearings per specification	Monthly			
Inspect drive belts and flex coupling	Bi-Monthly			
Re-lubricate motor bearings	Bi-Monthly			
Check wire connection for corrosion and tightness	Annual			
Inspect Foundation & correct deficiencies	Annual			
Check conditions of isolation pads	Annual			
Check blower motor alignment	Annual			
Clean ventilation openings of blower motor	As Needed			
Piping				
Retighten all flange bolt connections	Annually			
Check all gaskets for leakage	Semi-Annually			
Check rubber expansion joints for wear	Semi-Annually			
Check piping alignment	Annually			
Flame Arrestor				
Clean internal bank per specifications	Monthly			
Check back pressure and clean bank assembly	Monthly			
Propane Pilot System				
Check solenoid manual override	Semi-Annually			
Clean pressure regulator vent	Semi-Annually			
Check all connections for leaks	Semi-Annually			
Clean solenoid valve per specifications	Annually			
Flare Control Panel				
Check wire connections for corrosion and tightness	Semi-Annually			
Check system permissive	Annually			
Flow Meter				
Inspect and clean flow meter to meet the requirements for Carbon Credits and the GHG Reporting Rule.	Quarterly			
Calibrate the flow meter annually to meet the requirements for the Carbon Credits and GHG Reporting Rule.	Annually			

APPENDIX K

HYDROGEN SULFIDE FORM

Weather Conditions:

Temperature:_____ Barometric Pressure:_____

Sky Conditions:_____

Wind Speed:_____ Wind Direction:_____

Moretown Landfill, Inc. - H2S Sampling

Cornerstone Technician: _____ **Date:** _____

Collector ID	Sampling Time	H2S Concentration		QRAE Tube Used[2] (ppm, %, or both)	No. of Pump Strokes	Comments
		1st Sample	2nd Sample[1]			

APPENDIX L

GREENHOUSE GAS MONTHLY FORM

MONTHLY GHG MONITORING FORM
MORETOWN LANDFILL, INC.

Technician(s): _____
Date: _____
Monitoring Equipment _____

ENGINE 1

Sample ID	Date & Time	CH4 (%)	CO2 (%)	O2 (%)	Bal. Gas (%)	Gas Temp.(F)	Flow (SCFM)	Comments:

Additional Flow devices:	Flow (SCFM)	Total Flow (SCF)	Gas Temp.(F)	Flare Temp. (F)
Yokogowa Recorder				
Flow Meter				
Touch Screen				

ENGINE 2

Sample ID	Date & Time	CH4 (%)	CO2 (%)	O2 (%)	Bal. Gas (%)	Gas Temp.(F)	Flow (SCFM)	Comments:

Additional Flow devices:	Flow (SCFM)	Total Flow (SCF)	Gas Temp.(F)	Flare Temp. (F)
Yokogowa Recorder				
Flow Meter				
Touch Screen				

TOTAL

Sample ID	Date & Time	CH4 (%)	CO2 (%)	O2 (%)	Bal. Gas (%)	Gas Temp.(F)	Flow (SCFM)	Comments:

Additional Flow devices:	Flow (SCFM)	Total Flow (SCF)	Gas Temp.(F)	Flare Temp. (F)
Yokogowa Recorder				
Flow Meter				
Touch Screen				

FLARE 1

Sample ID	Date & Time	CH4 (%)	CO2 (%)	O2 (%)	Bal. Gas (%)	Gas Temp.(F)	Flow (SCFM)	Comments:

Additional Flow devices:	Flow (SCFM)	Total Flow (SCF)	Gas Temp.(F)	Flare Temp. (F)
Yokogowa Recorder				
Flow Meter				
Touch Screen				

FLARE 2

Sample ID	Date & Time	CH4 (%)	CO2 (%)	O2 (%)	Bal. Gas (%)	Gas Temp.(F)	Flow (SCFM)	Comments:

Additional Flow devices:	Flow (SCFM)	Total Flow (SCF)	Gas Temp.(F)	Flare Temp. (F)
Yokogowa Recorder				
Flow Meter				
Touch Screen				

APPENDIX E

ENVIRONMENTAL MONITORING LOCATION PLAN

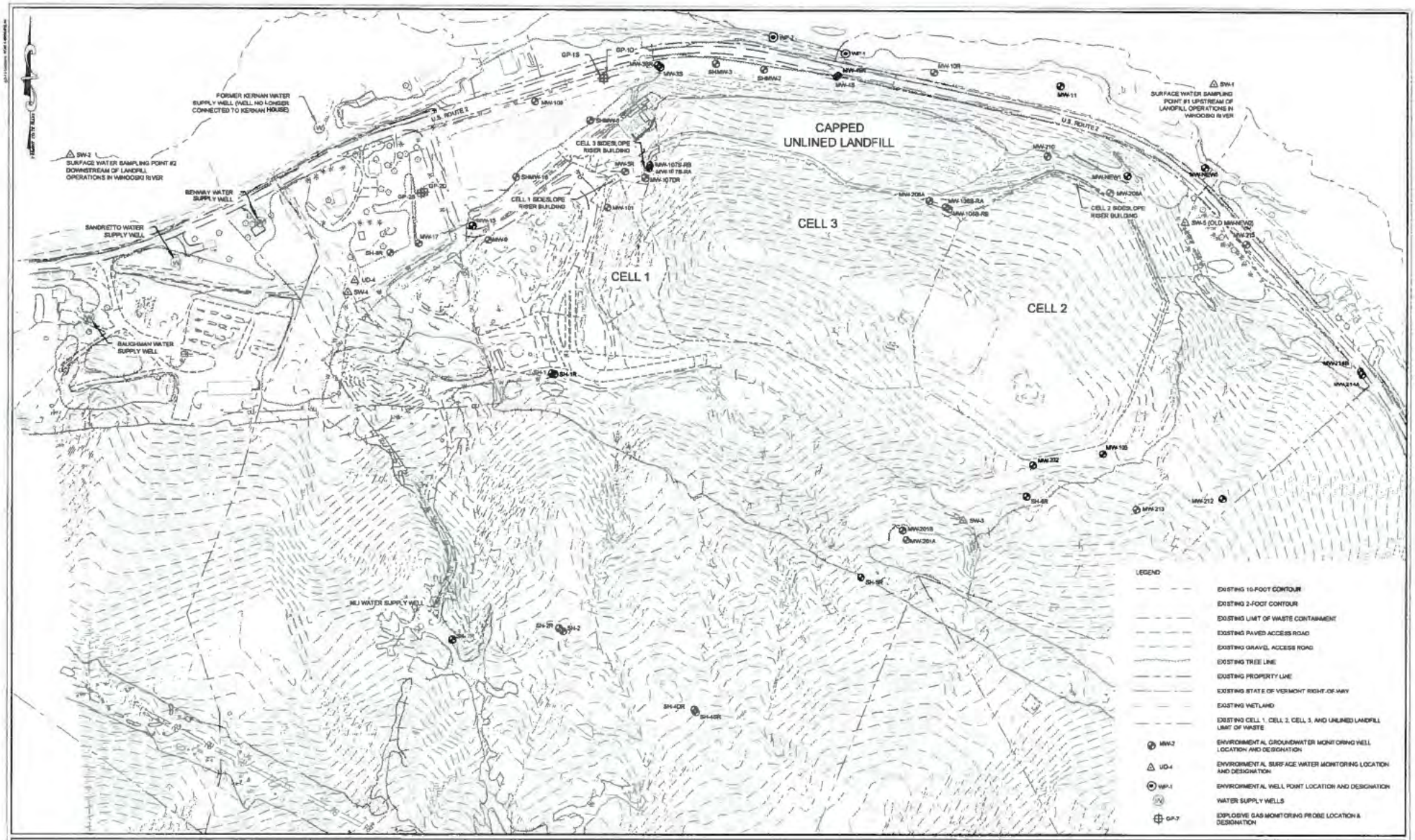

SANBORN HEAD

GRAPHICAL SCALE
150' 75' 0 150' 300

NO.	DATE	DESCRIPTION	BY

DRAWN BY: C. WEAVER
DESIGNED BY: C. WEAVER
REVIEWED BY: J. HANEY
PROJECT MGR: J. HANEY
PIC: M. POIRIER
DATE: FEBRUARY 2013

MORETOWN LANDFILL, INC.
MORETOWN, VERMONT

ENVIRONMENTAL MONITORING LOCATION PLAN

PROJECT NUMBER: 3040.03

SHEET NUMBER: FIGURE 1

APPENDIX F

ACTIVITY FREQUENCY TABLE

Activity Frequency Schedule		
Task Description	Recurrence	Odor Plan Reference
Staff Training		Section 2.4
Odor Patrol	Daily	Section 2.6
Cover Integrity Check	Daily	Section 3.1
Leachate Seepage - Slope Face	Daily	Section 4.4
LFG Extraction Well Field Tuning	Daily to Weekly	Section 3.1
Odor Activities	Daily to Weekly	Section 3.3
LFGTE Facility and Flare Inspections	Daily to Monthly	Section 3.1
Vertical LFG Extraction Well Maintenance	Weekly to Monthly	Section 3.1 and Section 3.3
Leachate Seepage - Site	Weekly to Monthly	Section 4.4
Methane Monitoring	Monthly	Section 2.7
Surface Emissions Monitoring	Monthly	Section 2.7, Section 3.1, and Appendix C
LFG Composition and Flow Monitoring	Monthly	Section 3.1
Cover Integrity Check	Monthly	Section 3.6
Gas Well Liquid Level Check	Quarterly	Section 3.1
Condensate Knockout Tank Inspection	Monthly	Section 3.2 and Appendix D
Well Field Balancing	Monthly	Section 3.3
Flare LFG Monitoring	Monthly	Section 3.3
GCCS Review	Routine	Section 3.2 and Appendix D
Storm Water Slope Monitoring	Routine	Section 4.3
Landfill Liner Monitoring	Routine - Post Closure Only	Section 4.1
Flare Maintenance	Routine (Monthly)	Section 3.5 and Appendix D
Pump Maintenance	Semi-Annual	Section 3.7 and Appendix D
LFG Monitoring Reports	Routine - Post Closure Only	Section 4.5

Notes:

1. Daily tasks will be completed during each business day of the facility, not all days during the calendar year.