NOTES:
1) ORIGINAL CONDITIONS ARE AS OF 2014, PRIOR TO CONSTRUCTION.

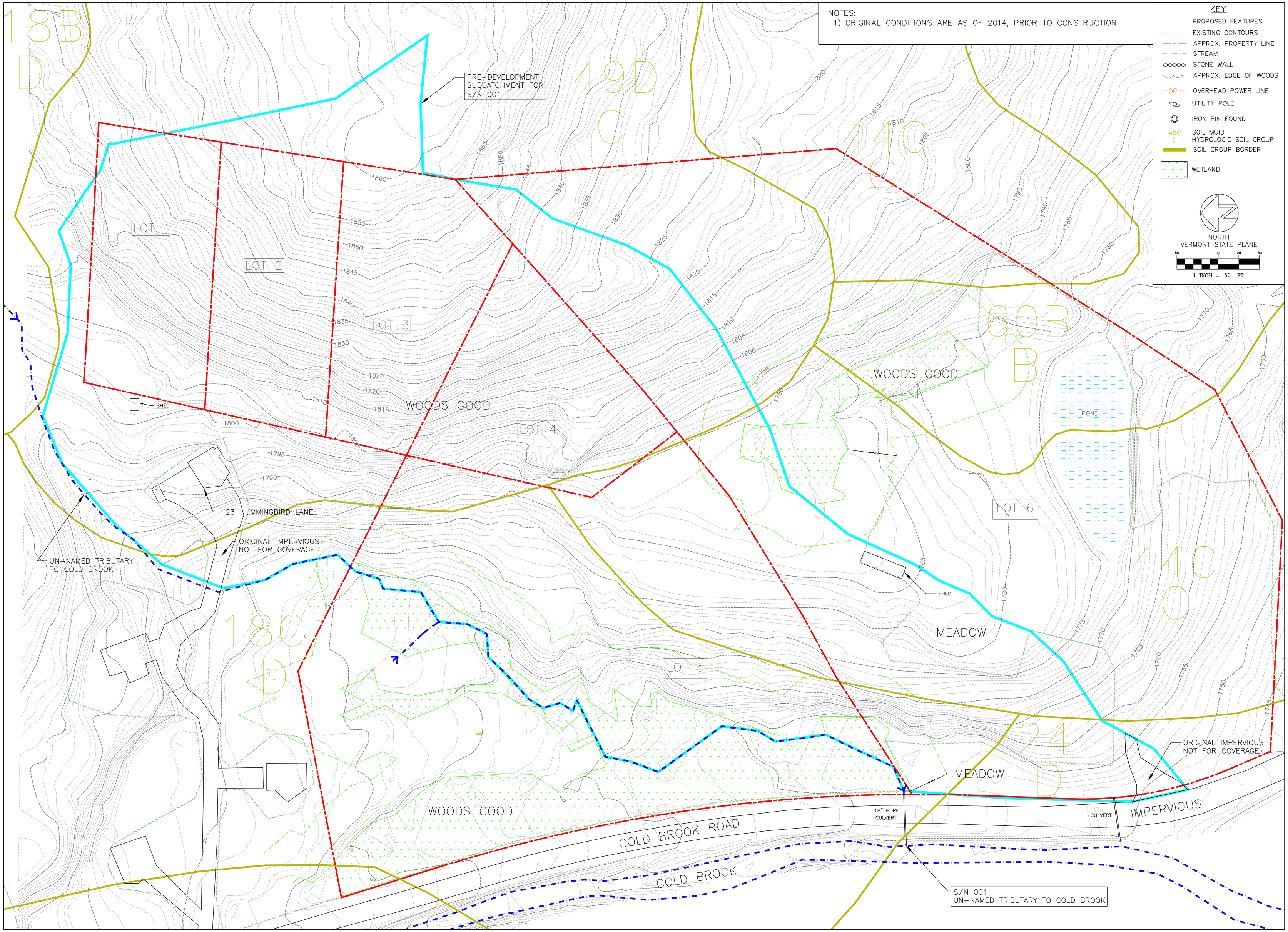

KEY

- PROPOSED FEATURES
- EXISTING CONTOURS
- APPROX. PROPERTY LINE
- STREAM
- STONE WALL
- APPROX. EDGE OF WOODS
- OPL — OVERHEAD POWER LINE
- UTILITY POLE
- IRON PIN FOUND
- 49C C — SOIL MUID HYDROLOGIC SOIL GROUP
- SOIL GROUP BORDER
- WETLAND

NORTH
VERMONT STATE PLANE

50 0 25 50
1 INCH = 50 FT.

TRINITY ENGINEERING
TECHNICAL SERVICES, LLC
751 MAIN ROAD
STAMFORD, VT 05352
(802) 694-1919
34 HAYDEN ROWE ST., SUITE 154
HOPKINTON, MA 01748
(508) 589-7086

COPYRIGHT © TRINITY – ALL RIGHTS RESERVED.
ALL MATERIAL CONTAINED WITHIN IS PROPERTY OF TRINITY AND NOT TO BE REPRODUCED WITHOUT EXPRESS PERMISSION.

REV. NO.	DATE	DESCRIPTION	BY
2	4/14/2020	ADDRESS VTDEC COMMENTS	J.E.D.
1	3/30/2020	ORIGINAL CONDITIONS SITE PLAN	

STATE OF VERMONT
CIVIL
JOHN E. DUPRAS
No. 7378
LICENSED
PROFESSIONAL ENGINEER

DESIGNED BY: J.E.D.
DRAWN BY: G.J.V.
CHECKED BY: J.E.D.
SCALE: AS SHOWN

TITLE: ORIGINAL CONDITIONS SITE PLAN

PROJECT: PREPARED FOR COLD BROOK CROSSINGC HOA, LOTS 1-5 WILMINGTON, VERMONT

DATE: 4/14/2020

PROJECT NUMBER: 19156

SHEET NUMBER: C-1

SHEET: 1 OF 8

NOTES:
1) EXISTING CONDITIONS ARE AS OF DECEMBER 2019.
2) EXISTING IMPERVIOUS ON LOT 6 IS NOT FOR PERMIT COVERAGE.
3) NOT ALL EXISTING IMPERVIOUS IS SHOWN ON LOT 6.
4) EXISTING IMPERVIOUS OUTSIDE OF LOTS 1–5, BUT WITHIN THE POST DEVELOPMENT BOUNDARY IS INCLUDED IN CALCULATIONS FOR RUN–OFF RATES AND VOLUMES.

KEY
- PROPOSED FEATURES
- EXISTING CONTOURS
- APPROX. PROPERTY LINE
- STREAM
- STONE WALL
- APPROX. EDGE OF WOODS
- OPL — OVERHEAD POWER LINE
- UTILITY POLE
- IRON PIN FOUND
- HYDROLOGIC SOIL GROUP
- SOIL GROUP BORDER
- IMPERVIOUS FOR PERMIT
- EXISTING IMPERVIOUS (NOT FOR PERMIT COVER.)
- WETLAND
- EXISTING RIP RAP

NORTH
VERMONT STATE PLANE
50 0 25 50
1 INCH = 50 FT.

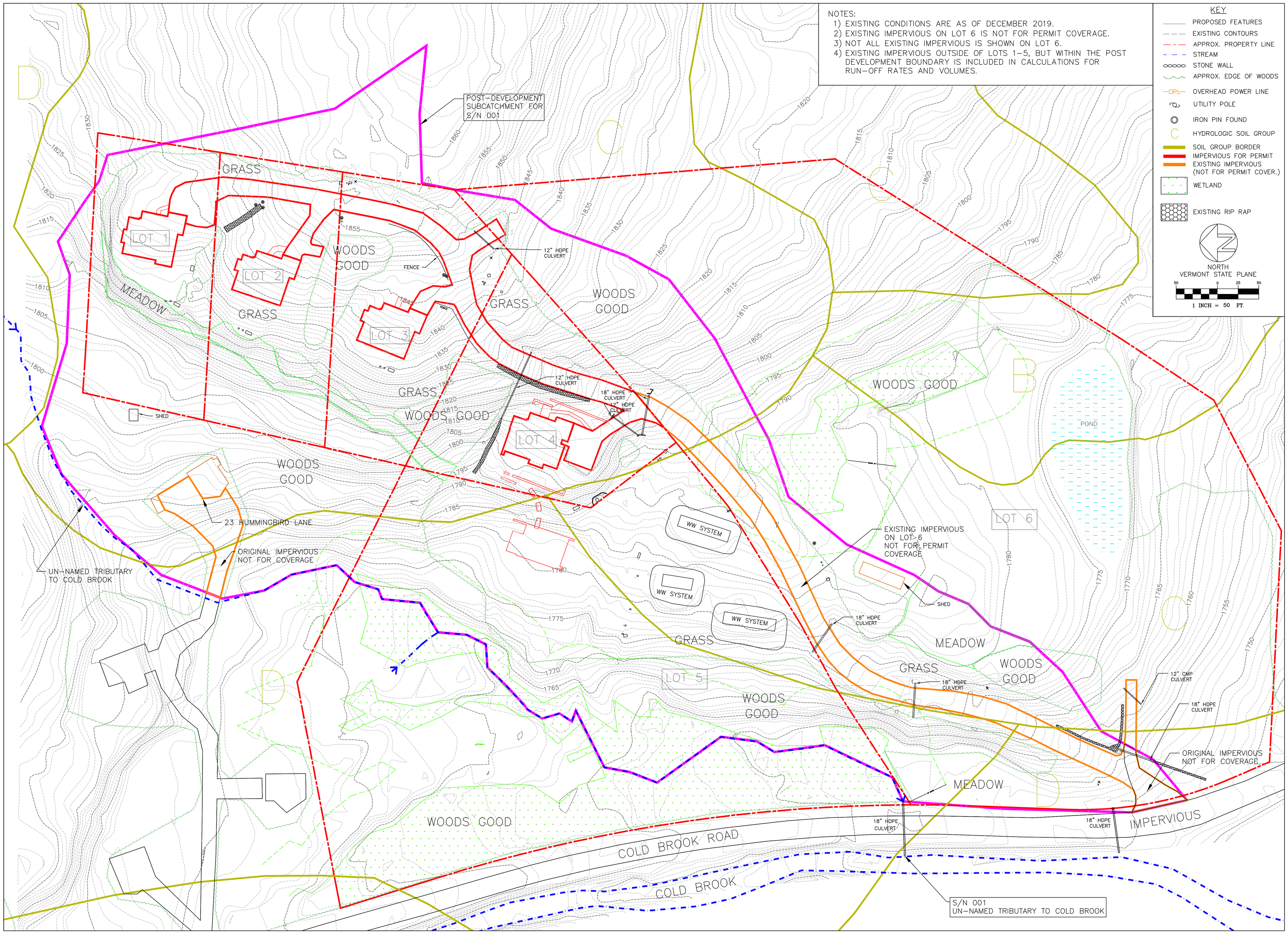

TRINITY ENGINEERING
TECHNICAL SERVICES, LLC
751 MAIN ROAD
STAMFORD, VT 05352
(802) 694–1919
34 HAYDEN ROWE ST., SUITE 154
HOPKINTON, MA 01748
(508) 589–7086

COPYRIGHT © TRINITY – ALL RIGHTS RESERVED.
ALL MATERIAL CONTAINED WITHIN IS PROPERTY OF TRINITY AND NOT TO BE REPRODUCED WITHOUT WRITTEN PERMISSION.

REV. NO.	DATE	DESCRIPTION	BY
2	4/14/20	ADDRESS VTDEC COMMENTS	J.E.D.
1	3/30/20	EXISTING CONDITIONS SITE PLAN	

STATE OF VERMONT
CIVIL
JOHN E. DUPRAS
No. 7378
LICENSED
PROFESSIONAL ENGINEER

DESIGNED BY: J.E.D.
DRAWN BY: G.J.V.
CHECKED BY: J.E.D.
SCALE: AS SHOWN

TITLE: EXISTING CONDITIONS SITE PLAN

PROJECT: PREPARED FOR COLD BROOK CROSSINGC HOA, LOTS 1-5 WILMINGTON, VERMONT

DATE: 4/14/2020

PROJECT NUMBER: 19156

SHEET NUMBER: C-2

SHEET: 2 OF 8

NOTES:
1) EXISTING CONDITIONS ARE AS OF DECEMBER 2019.
2) EXISTING IMPERVIOUS ON LOT 6 IS NOT FOR PERMIT COVERAGE.
3) NOT ALL EXISTING IMPERVIOUS IS SHOWN ON LOT 6.
4) EXISTING IMPERVIOUS OUTSIDE OF LOTS 1-5, BUT WITHIN THE POST DEVELOPMENT BOUNDARY IS INCLUDED IN CALCULATIONS FOR RUN-OFF RATES AND VOLUMES.

KEY
- PROPOSED FEATURES
- EXISTING CONTOURS
- APPROX. PROPERTY LINE
- STREAM
- STONE WALL
- APPROX. EDGE OF WOODS
- OPL — OVERHEAD POWER LINE
- UTILITY POLE
- IRON PIN FOUND
- HYDROLOGIC SOIL GROUP
- SOIL GROUP BORDER
- IMPERVIOUS FOR PERMIT
- EXISTING IMPERVIOUS (NOT FOR PERMIT COVER.)
- WETLAND
- EXISTING RIP RAP

NORTH
VERMONT STATE PLANE
50 0 25 50
1 INCH = 50 FT.

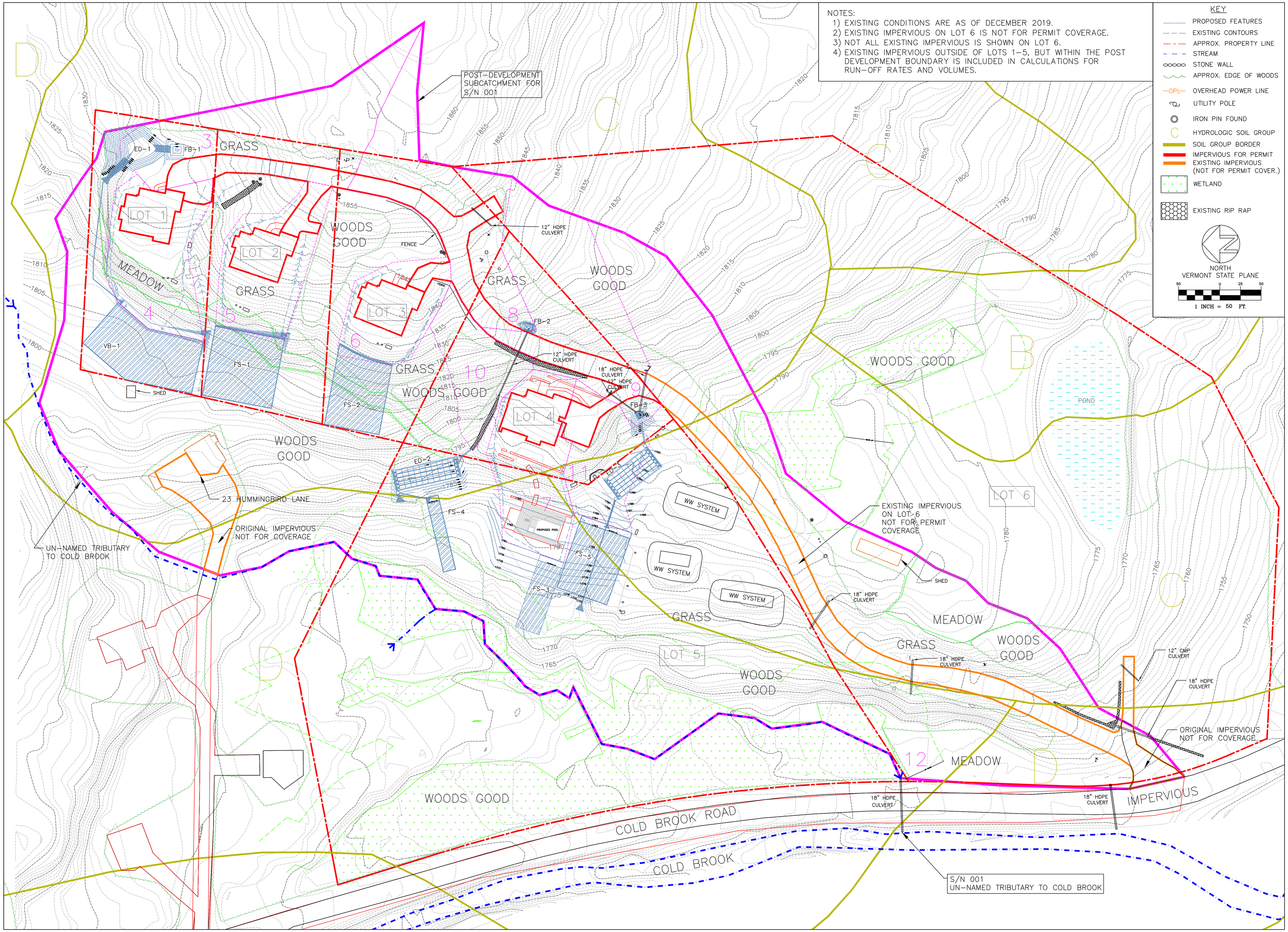

TRINITY ENGINEERING
TECHNICAL SERVICES, LLC
751 MAIN ROAD
STAMFORD, VT 05352
(802) 694-1919
34 HAYDEN ROWE ST., SUITE 154
HOPKINTON, MA 01748
(508) 589-7086

COPYRIGHT © TRINITY – ALL RIGHTS RESERVED.
ALL MATERIAL CONTAINED WITHIN IS PROPERTY OF TRINITY AND NOT TO BE REPRODUCED WITHOUT WRITTEN PERMISSION.

REV. NO.	DATE	DESCRIPTION	BY
2	4/14/20	ADDRESS VTDEC COMMENTS	J.E.D.
1	3/30/20	PROPOSED CONDITIONS SITE PLAN	

STATE OF VERMONT
CIVIL
JOHN E. DUPRAS
No. 7378
LICENSED
PROFESSIONAL ENGINEER

DESIGNED BY: J.E.D.
DRAWN BY: G.J.V.
CHECKED BY: J.E.D.
SCALE: AS SHOWN

TITLE: PROPOSED CONDITIONS SITE PLAN

PROJECT: PREPARED FOR COLD BROOK CROSSINGC HOA, LOTS 1-5 WILMINGTON, VERMONT

DATE: 4/14/2020

PROJECT NUMBER: 19156

SHEET NUMBER: C-3

SHEET: 3 OF 8

DETAIL: FOREBAY 1, EXTENDED DETENTION 1, VEG. BUFFER-1

SCALE 1" = 20'

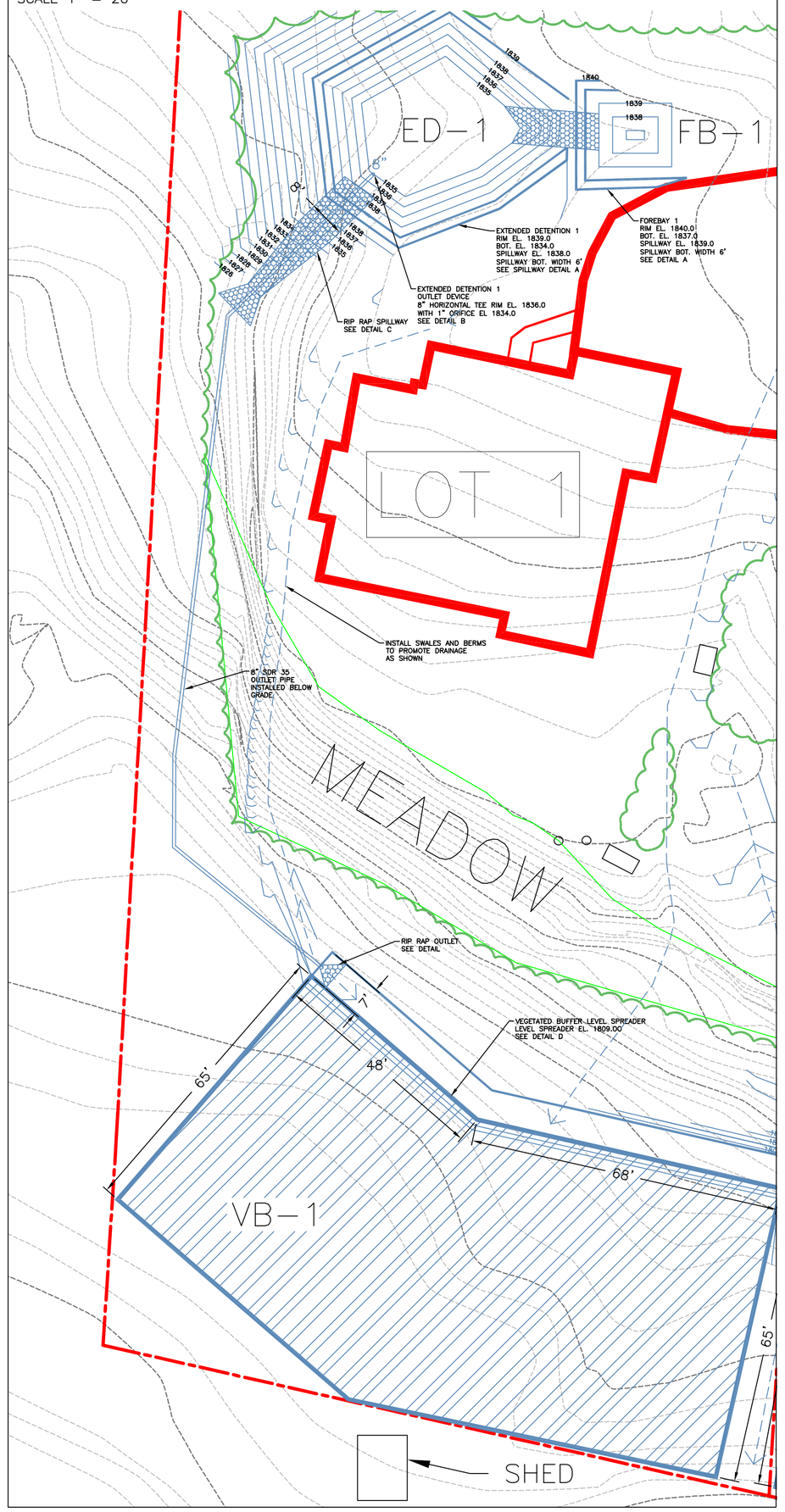

DETAIL: FILTER STRIP 2 & 4, EXTENDED DETENTION 2

SCALE 1" = 20'

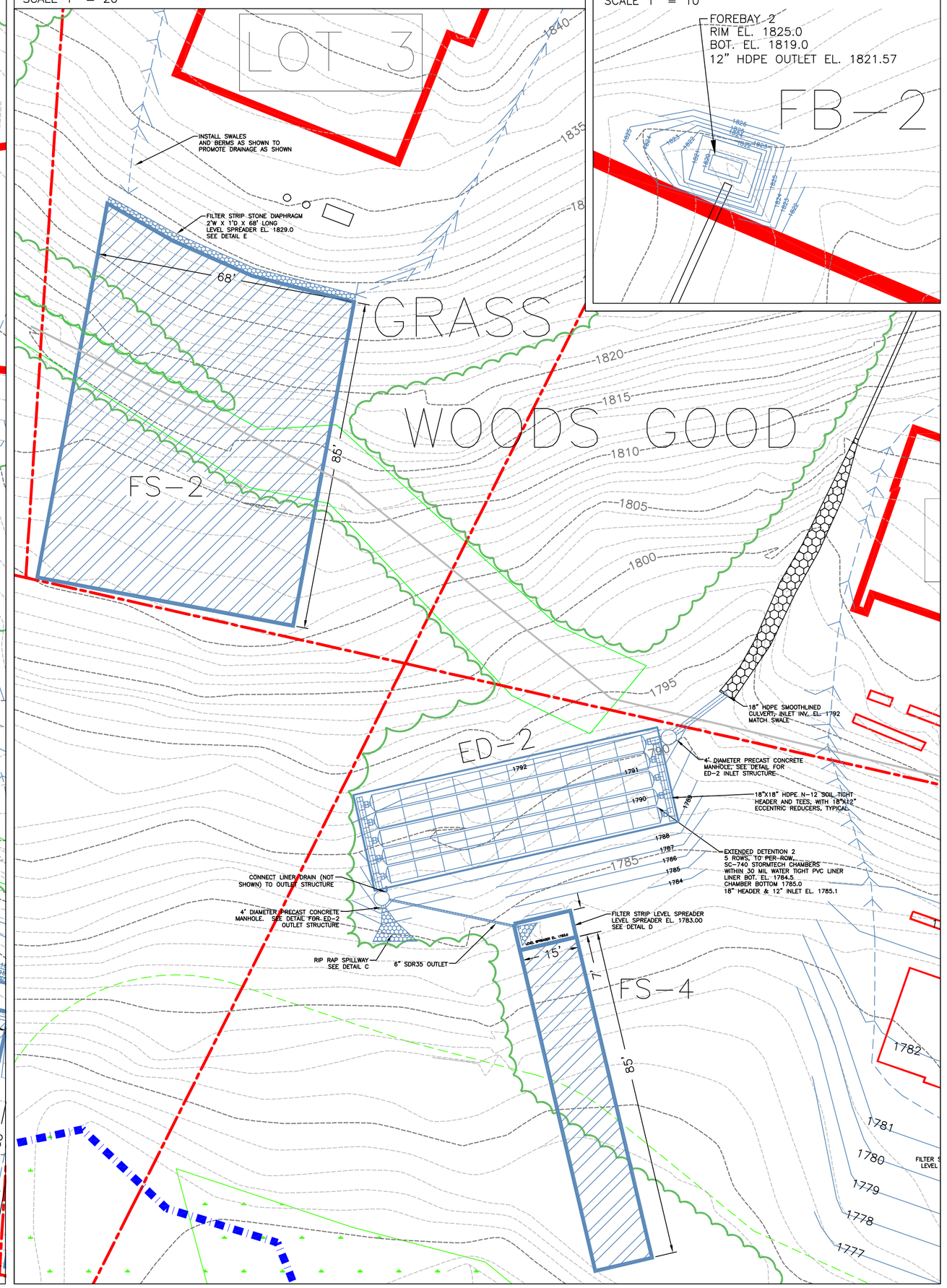

DETAIL: FOREBAY 2

SCALE 1" = 10'

DETAIL: FOREBAY 3, EXTEND. DET 3, FILTER STRIP 3 & 5

SCALE 1" = 20'

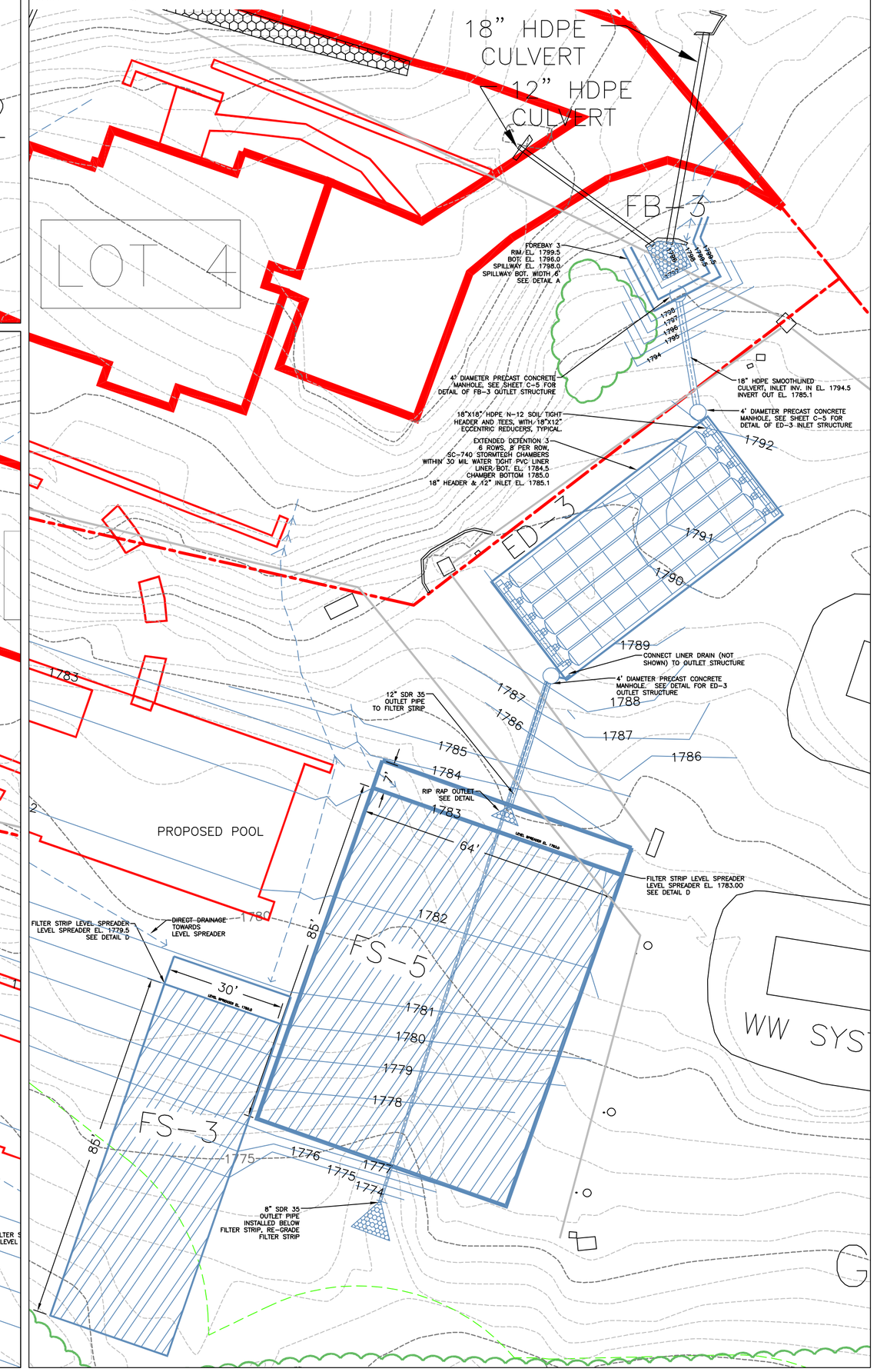

DETAIL A: SPILLWAY DETAIL

NOT TO SCALE

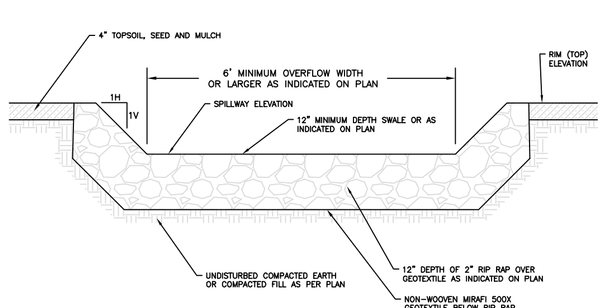

DETAIL B: OUTLET STRUCTURE DETAIL

NOT TO SCALE

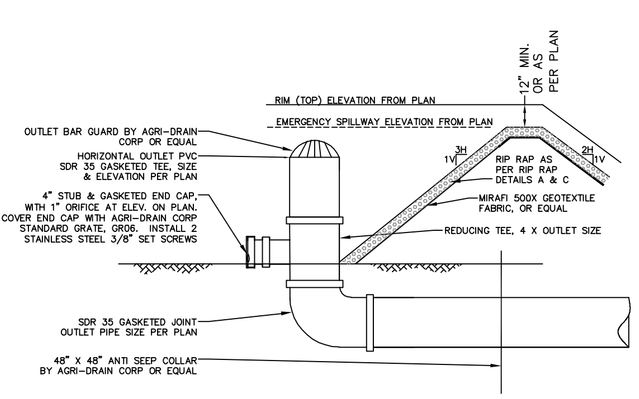

DETAIL C: TYPICAL RIP RAP DETAIL

NOT TO SCALE

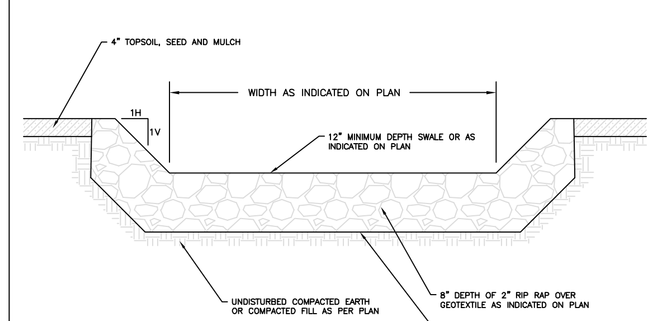

DETAIL D: LEVEL SPREADER CROSS SECTION

NOT TO SCALE

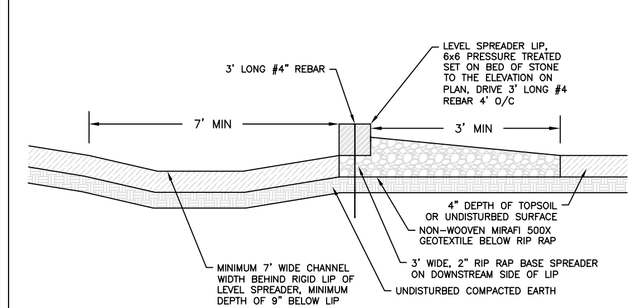

DETAIL E: STONE DIAPHRAGM LEVEL SPREADER

NOT TO SCALE

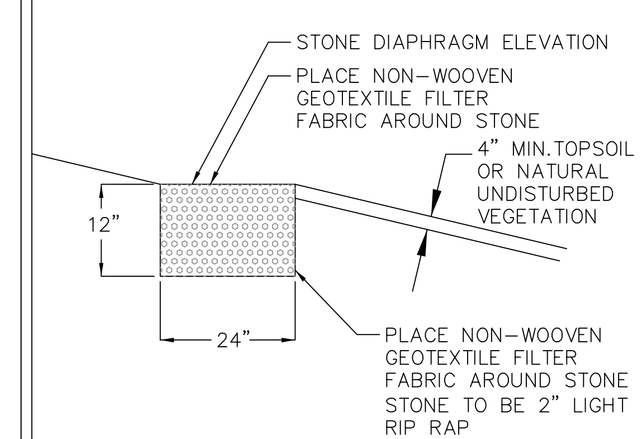

TRINITY ENGINEERING
TECHNICAL SERVICES, LLC
751 MAIN ROAD
STAMFORD, VT 05352
(802) 694-1919
34 HAYDEN ROWE ST. SUITE 154
HOPKINTON, MA 01748
(508) 589-7086

COPYRIGHT © TRINITY – ALL RIGHTS RESERVED.
ALL MATERIAL CONTAINED WITHIN IS PROPERTY OF TRINITY, AND NOT TO BE REPRODUCED WITHOUT WRITTEN PERMISSION

REV. NO.	DATE	DESCRIPTION	BY
1	4/14/2020	ADDRESS VTDEC COMMENTS	J.E.D.
1	3/30/2020	STORMWATER DETAILS	

STATE OF VERMONT
CIVIL
JOHN E. DUPRAS
No. 7378
LICENSED PROFESSIONAL ENGINEER

DESIGNED BY: J.E.D.
DRAWN BY: G.J.V.
CHECKED BY: J.E.D.
SCALE: AS SHOWN

TITLE: STORMWATER DETAILS

PROJECT: PREPARED FOR COLD BROOK CROSSING CC HOA, LOTS 1-5 WILMINGTON, VERMONT

DATE: 4/14/2020

PROJECT NUMBER: 19156

SHEET NUMBER: C-4

SHEET: 4 OF 8

CONSTRUCTION NOTES:

1. UTILITY LOCATIONS ARE BASED ON VISIBLE EVIDENCE AND AS DESCRIBED BY OWNERS REPRESENTATIVES AND RECORD DRAWINGS. PRIOR TO ORDERING MATERIALS CONTRACTOR SHALL DO EXPLORATORY EXCAVATION TO CONFIRM THEIR LOCATION, AND NOTIFY THE ENGINEER OF ANY POTENTIAL CONFLICTS.
2. CONTRACTOR TO FLAG LIMITS OF WORK PRIOR TO STARTING CONSTRUCTION, OR CONSULT OWNER/ENGINEER FOR ASSISTANCE.
3. NO DISRUPTION OF EXISTING CONDITIONS IS ALLOWED BEYOND THE LIMITS OF WORK. STORE ALL BUILDING MATERIALS WITHIN THE LIMITS OF WORK.
4. ALL CONTRACTORS AND SUB-CONTRACTORS ARE TO BE MADE AWARE OF THE EROSION CONTROL MEASURES AND ANY OTHER PERMITS FOR THE PROJECT IN ORDER TO AVOID CONFLICTS AND VIOLATIONS IN EXECUTING WORK.
5. THE SEED MIXTURE SHALL BE AN AGWAY CONSERVATION GREEN MIX OR EQUAL HAVING APPROXIMATE PROPORTIONS BY WEIGHT OF:

CANADIAN CREEPING RED FESCUE	50%
KENTUCKY BLUEGRASS	30%
DOMESTIC RYE GRASS	15%
RED TOP	5%
WHITE CLOVER	5%

6. THE CONSERVATION MIX SHALL BE APPLIED AT THE RATE OF 5 LBS. PER 1000 SF.
7. HAY MULCH MAY BE APPLIED BY CHOPPER/BLOWER OR BY HAND.
8. ALL SLOPES GREATER THAN 6 PERCENT SHALL HAVE A FAST GERMINATING EROSION CONTROL SEED MIXTURE ADDED AT A RATE OF 20 LBS PER ACRE TO THE SPECIFIED CONSERVATION MIX.
9. ALL EROSION CONTROL AND SEDIMENT CONTROL MEASURES SHALL BE INSPECTED AND REPAIRED AT THE END OF EACH WORKING DAY AND AFTER EACH STORM EVENT AND / OR THAW EVENT.
10. SPOILS CLEANED FROM SEDIMENT TRAPS IS TO BE PLACED WITHIN THE LIMITS OF WORK, IN AN AREA THAT WILL NOT CONTRIBUTE TO FURTHER EROSION.
11. SPOILS CLEANED FROM SEDIMENT TRAPS IS TO BE DEWATERED WITHIN AN SEDIMENT CONTROL BARRIER. ONCE DEWATERED IT IS TO BE USED WITHIN A NON-STRUCTURAL FILL AREA WHERE IT WILL BE BURIED, OR SEEDED AND MULCHED.

TYPICAL REQUIREMENTS FOR EACH STANDARD TREATMENT PRACTICE (STP):

FOREBAY:

1. FOREBAYS ARE INTENDED TO TREAT STORMWATER ORIGINATING FROM ROADWAYS AND OTHER IMPERVIOUS SURFACES SUCH AS DRIVEWAYS.
2. FOREBAY SHALL HAVE SIDE SLOPES NO STEEPER THAN 2:1 MAXIMUM AND A MINIMUM OF 2' FROM INVERT OF OUTLET DEVICE AND BOTTOM OF FOREBAY.
3. THE OUTLET OF THE FOREBAY SHALL BE SIZED TO PASS THE SAME FLOW DESIGNED TO ENTER THE FOREBAY.
4. FOREBAY SHALL HAVE ACCESS FOR MAINTENANCE AND THE BOTTOM SHALL BE FULLY ACCESSIBLE FOR PERIODIC CLEAN OUTS.
5. A FIXED VERTICAL SEDIMENT MARKER CONSISTING OF A 6" TEE POST, DRIVEN TO A POINT THAT THE TOP OF THE TEE POST IS 4' ABOVE THE BOTTOM OF THE FOREBAY, SHALL BE SET TO MEASURE SEDIMENT DEPOSITION.

EXTENDED DETENTION (DRY DETENTION PONDS):

1. EXTENDED DETENTION BASIS SHALL HAVE SIDE SLOPES NO STEEPER THAN 2:1 MAXIMUM.
2. OUTLET STRUCTURE SHALL BE INSTALLED IN THE BANK OF THE POND TO FACILITATE ACCESS AND MAINTENANCE.
3. THE LOW FLOW ORIFICE AND TRASH RACK ARE DESIGNED TO BE REMOVABLE AND ADJUSTABLE BY ROTATING THE GASKETED END CAP THAT LOW FLOW ORIFICE IS DRILLED INTO. THE TRASH RACK SCREEN IS DESIGNED TO BE REMOVABLE BY REMOVING THE STAINLESS STEEL SET SCREWS.
4. EMERGENCY SPILLWAY SHALL FOLLOW THE MINIMUM WIDTH IN THE SPILLWAY DETAIL, OR AS CALLED OUT ON PLAN. SPILLWAY WIDTH, CHANNEL DEPTH, AND DEPTH OF RIP RAP IS INTENDED TO BE INSTALLED WITHIN THE EXTENDED DETENTION BASIN, OVER THE OUTSIDE WALL AND TO A POINT 10' MINIMUM DOWNSTREAM OF THE TOE OF DETENTION BASIN.
5. OUTLET RISER SHALL HAVE A BAR GUARD INSTALLED AS SHOWN IN THE OUTLET STRUCTURE DETAIL, DIAMETER SIZE PER THE PLAN VIEW.

VEGETATED BUFFERS AND FILTER STRIPS:

1. BOTH VEGETATED BUFFERS AND FILTER STRIPS MUST BE FULLY VEGETATED AND COMPLY WITH THE POST CONSTRUCTION SOIL DEPTH AND QUALITY STANDARDS, AS DESCRIBED IN THE SOIL MANAGEMENT DRAWING.
2. VEGETATED BUFFERS SHALL REMAIN IN A NATURAL STATE AND MUST BE PROTECTED TO ENSURE THAT NO FUTURE DEVELOPMENT, DISTURBANCE OR CLEARING OCCUR WITHIN THE DEFINED VEGETATED BUFFERS. ANY AREAS TO BE MOWED, MUST NOT BE MOWED MORE THAN TWICE ANNUALLY. GRADING OR CLEARING OF NATURAL VEGETATION WITHIN VEGETATED BUFFERS IS NOT ALLOWED.
3. FILTER STRIPS ARE IDENTIFIED ON THE PLANS AND ARE RESTRICTED FROM FUTURE DEVELOPMENT, DISTURBANCE OR CLEARING, EXCEPT AS MAY BE DESCRIBED IN AN APPLICABLE VEGETATION MAINTENANCE PLAN. IF NO SUCH PLAN IS FILED FOR THE PROJECT, THE ONLY DISTURBANCE ALLOWED IS MOWING OF LAWN AREAS AND TWICE ANNUAL CUTTING OF MEADOWS.
4. EACH VEGETATED BUFFER OR FILTER STRIP MUST BE FED BY AND APPROPRIATELY SIZED AND MAINTAINED LEVEL SPREADER OR STONE DIAPHRAGM.
5. LEVEL SPREADERS MUST BE INSTALLED AND ADJUSTED IF NECESSARY TO REMAIN WITHIN 0.02' LEVEL AT ALL POINTS ALONG THE LENGTH OF THE LEVEL SPREADER.
6. STONE DIAPHRAGMS MUST FUNCTION SO AS TO PREVENT CONCENTRATED FLOW FROM ENTERING THE VEGETATED BUFFER OR FILTER STRIP. STONE GRADE MUST BE ADJUSTED AS REQUIRED TO ENSURE NO CONCENTRATED FLOW LEAVES THE STONE DIAPHRAGM. REFER TO APPLICABLE DETAILS AND PLANS FOR SIZING AND DESIGN FEATURES REQUIRED.

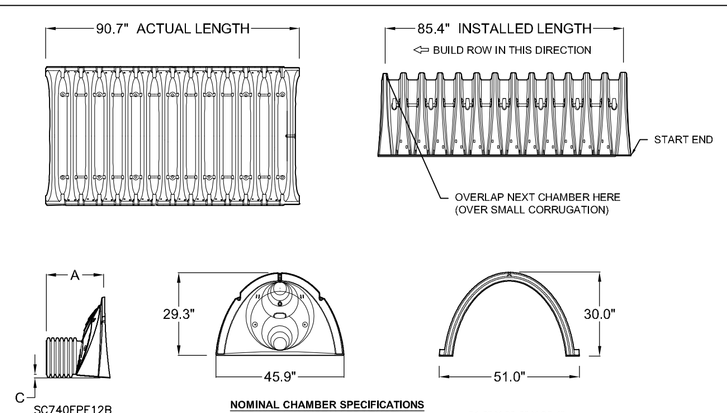

SC740EPE12B

STUB	A	C
12"	14.7"	1.2"

NOMINAL CHAMBER SPECIFICATIONS

SIZE (W X H X INSTALLED LENGTH)	51.0" X 30.0" X 85.4"
CHAMBER STORAGE	45.9 CUBIC FEET
MINIMUM INSTALLED STORAGE*	74.9 CUBIC FEET
WEIGHT	75.0 lbs.

*ASSUMES 6" STONE ABOVE, BELOW, AND BETWEEN CHAMBERS

MODEL NUMBERS FOR END CAPS ARE EITHER SC740EPE12B OR SC740EPE12BPC
PRE-FAB STUBS AT BOTTOM OF END CAP FOR PART NUMBERS ENDING WITH "B"
PRE-CORED END CAPS END WITH "PC"

SC-740 STORMTECH CHAMBER TECHNICAL DETAILS
NOT TO SCALE

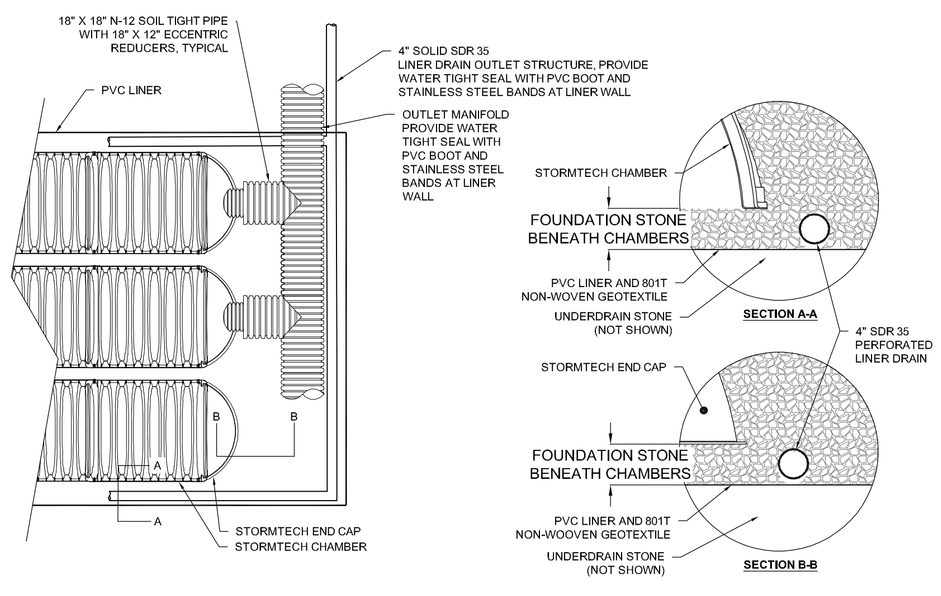

SC-740 STORMTECH CHAMBER LINER DRAIN DETAILS
NOT TO SCALE

ACCEPTABLE FILL MATERIALS: STORMTECH SC-740 CHAMBER SYSTEMS

	MATERIAL LOCATION	DESCRIPTION	AASHTO MATERIAL CLASSIFICATIONS	COMPACTION / DENSITY REQUIREMENT
D	**FINAL FILL:** FILL MATERIAL FOR LAYER 'D' STARTS FROM THE TOP OF THE 'C' LAYER TO THE BOTTOM OF FLEXIBLE PAVEMENT OR UNPAVED FINISHED GRADE ABOVE. NOTE THAT PAVEMENT SUBBASE MAY BE PART OF THE 'D' LAYER	TWO INCH MINUS CLEAN FILL, WITH THE TOP 4" TOPSOIL	N/A	PREPARE PER SITE DESIGN ENGINEER'S PLANS. PAVED INSTALLATIONS MAY HAVE STRINGENT MATERIAL AND PREPARATION REQUIREMENTS.
C	**INITIAL FILL:** FILL MATERIAL FOR LAYER 'C' STARTS FROM THE TOP OF THE EMBEDMENT STONE ('B' LAYER) TO 18" (450 mm) ABOVE THE TOP OF THE CHAMBER. NOTE THAT PAVEMENT SUBBASE MAY BE A PART OF THE 'C' LAYER.	GRANULAR WELL-GRADED SOIL/AGGREGATE MIXTURES, <35% FINES OR PROCESSED AGGREGATE. MOST PAVEMENT SUBBASE MATERIALS CAN BE USED IN LIEU OF THIS LAYER.	AASHTO M145[1] A-1, A-2-4, A-3 OR AASHTO M43[1] 3, 357, 4, 467, 5, 56, 57, 6, 67, 68, 7, 78, 8, 89, 9, 10	BEGIN COMPACTIONS AFTER 12" (300 mm) OF MATERIAL OVER THE CHAMBERS IS REACHED. COMPACT ADDITIONAL LAYERS IN 6" (150 mm) MAX LIFTS TO A MIN. 95% PROCTOR DENSITY FOR WELL GRADED MATERIAL AND 95% RELATIVE DENSITY FOR PROCESSED AGGREGATE MATERIALS. ROLLER GROSS VEHICLE WEIGHT NOT TO EXCEED 12,000 lbs (53 kN), DYNAMIC FORCE NOT TO EXCEED 20,000 lbs (89 kN).
B	**EMBEDMENT STONE:** FILL SURROUNDING THE CHAMBERS FROM THE FOUNDATION STONE ('A' LAYER) TO THE 'C' LAYER ABOVE.	CLEAN, CRUSHED, ANGULAR STONE	AASHTO M43[1] 3, 357, 4, 467, 5, 56, 57	NO COMPACTION REQUIRED.
A	**FOUNDATION STONE:** FILL BELOW CHAMBERS FROM THE SUBGRADE UP TO THE FOOT (BOTTOM) OF THE CHAMBER.	CLEAN, CRUSHED, ANGULAR STONE	AASHTO M43[1] 3, 357, 4, 467, 5, 56, 57	PLATE COMPACT OR ROLL TO ACHIEVE A FLAT SURFACE.[2,3]

PLEASE NOTE:
1. THE LISTED AASHTO DESIGNATIONS ARE FOR GRADATIONS ONLY. THE STONE MUST ALSO BE CLEAN, CRUSHED, ANGULAR. FOR EXAMPLE, A SPECIFICATION FOR #4 STONE WOULD STATE: "CLEAN, CRUSHED, ANGULAR NO. 4 (AASHTO M43) STONE".
2. STORMTECH COMPACTION REQUIREMENTS ARE MET FOR 'A' LOCATION MATERIALS WHEN PLACED AND COMPACTED IN 6" (150 mm) (MAX) LIFTS USING TWO FULL COVERAGES WITH A VIBRATORY COMPACTOR.
3. WHERE INFILTRATION SURFACES MAY BE COMPROMISED BY COMPACTION, FOR STANDARD DESIGN LOAD CONDITIONS, A FLAT SURFACE MAY BE ACHIEVED BY RAKING OR DRAGGING WITHOUT COMPACTION EQUIPMENT. FOR SPECIAL LOAD DESIGNS, CONTACT STORMTECH FOR COMPACTION REQUIREMENTS.

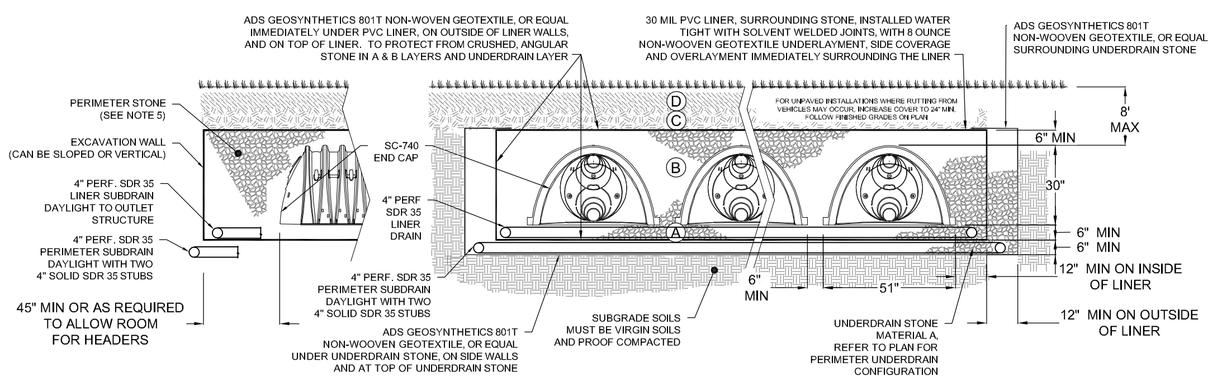

NOTES:

1. SC-740 CHAMBERS SHALL CONFORM TO THE REQUIREMENTS OF ASTM F2418 "STANDARD SPECIFICATION FOR POLYPROPYLENE (PP) CORRUGATED WALL STORMWATER COLLECTION CHAMBERS", OR ASTM F2922 "STANDARD SPECIFICATION FOR POLYETHYLENE (PE) CORRUGATED WALL STORMWATER COLLECTION CHAMBERS".
2. SC-740 CHAMBERS SHALL BE DESIGNED IN ACCORDANCE WITH ASTM F2787 "STANDARD PRACTICE FOR STRUCTURAL DESIGN OF THERMOPLASTIC CORRUGATED WALL STORMWATER COLLECTION CHAMBERS".
3. "ACCEPTABLE FILL MATERIALS" TABLE ABOVE PROVIDES MATERIAL LOCATIONS, DESCRIPTIONS, GRADATIONS, AND COMPACTION REQUIREMENTS FOR FOUNDATION, EMBEDMENT, AND FILL MATERIALS.
4. THE SITE DESIGN ENGINEER IS RESPONSIBLE FOR ASSESSING THE BEARING RESISTANCE (ALLOWABLE BEARING CAPACITY) OF THE SUBGRADE SOILS AND THE DEPTH OF FOUNDATION STONE WITH CONSIDERATION FOR THE RANGE OF EXPECTED SOIL MOISTURE CONDITIONS.
5. PERIMETER STONE MUST BE EXTENDED HORIZONTALLY TO THE EXCAVATION WALL FOR BOTH VERTICAL AND SLOPED EXCAVATION WALLS.
6. ONCE LAYER 'C' IS PLACED, ANY SOIL/MATERIAL CAN BE PLACED IN LAYER 'D' UP TO THE FINISHED GRADE. MOST PAVEMENT SUBBASE SOILS CAN BE USED TO REPLACE THE MATERIAL REQUIREMENTS OF LAYER 'C' OR 'D' AT THE SITE DESIGN ENGINEER'S DISCRETION.

SC-740 STORMTECH CHAMBER CROSS SECTION DETAILS
NOT TO SCALE

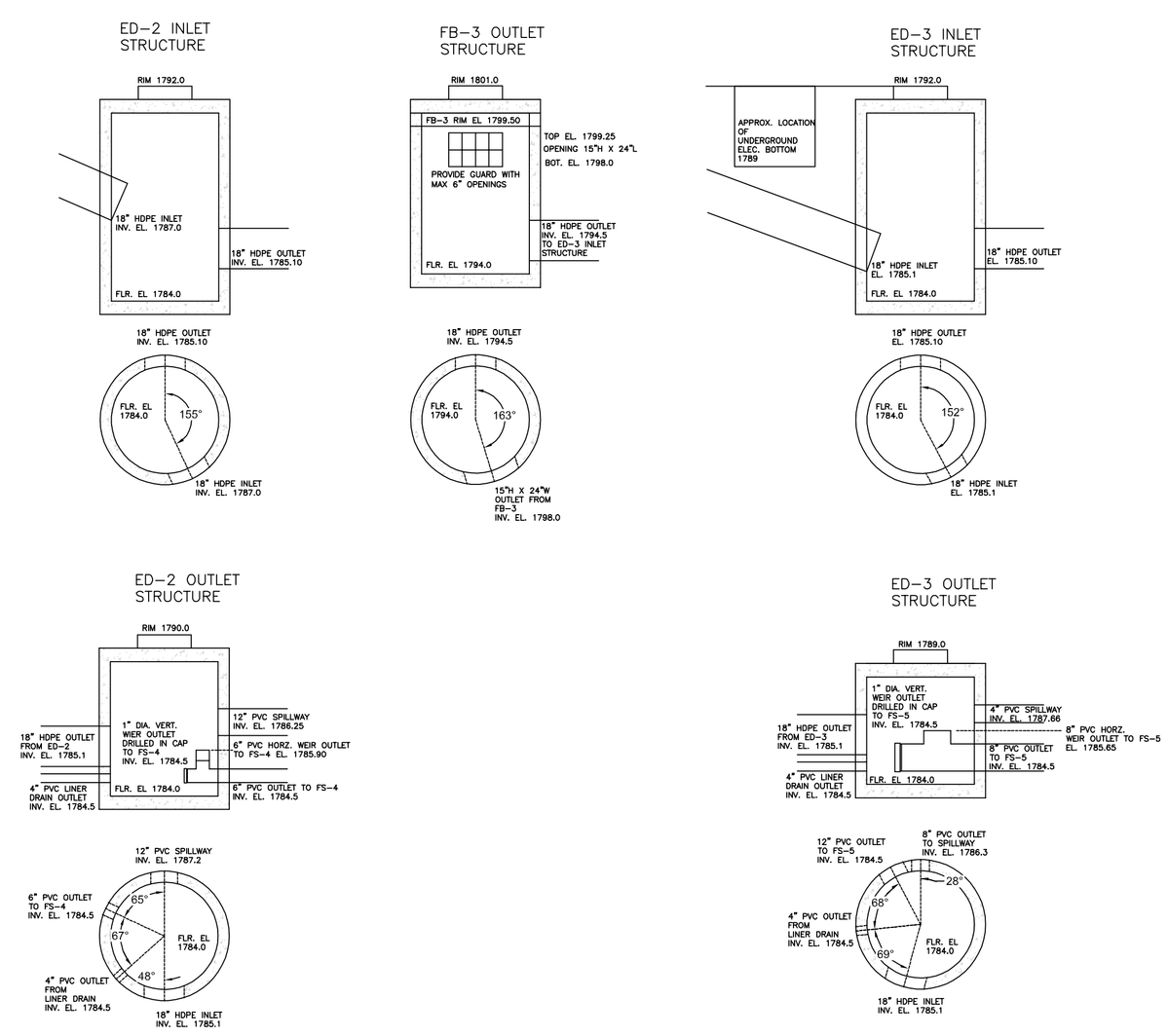

INLET AND OUTLET STRUCTURE DETAILS
NOT TO SCALE

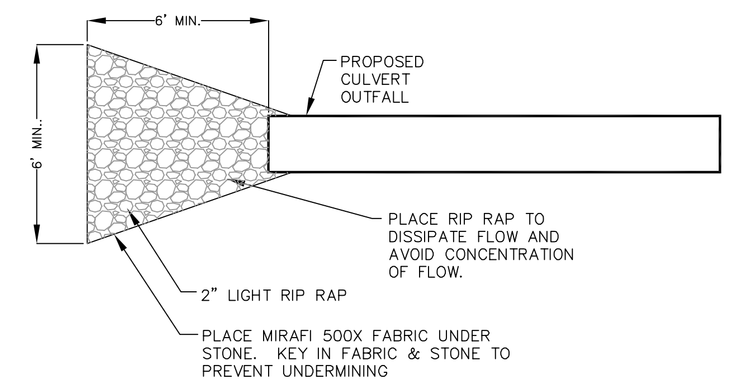

CULVERT OUTFALL DETAIL – TYPICAL
NOT TO SCALE

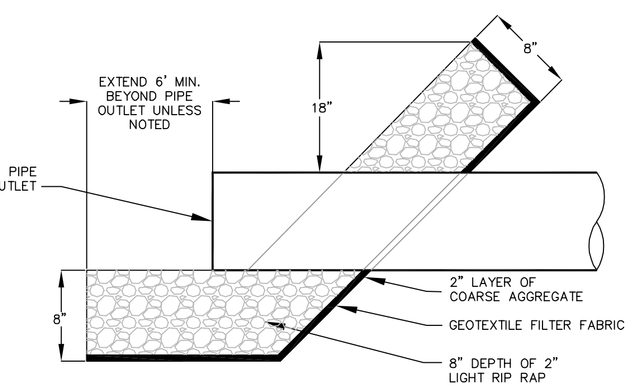

CULVERT OUTFALL DETAIL – TYPICAL
NOT TO SCALE

NOTES FOR THE BIDDING AND INSTALLATION OF THE SC-740 SYSTEM

1. STORMTECH SC-740 CHAMBERS SHALL NOT BE INSTALLED UNTIL THE MANUFACTURER'S REPRESENTATIVE HAS COMPLETED A PRE-CONSTRUCTION MEETING WITH THE INSTALLERS.
2. STORMTECH SC-740 CHAMBERS SHALL BE INSTALLED IN ACCORDANCE WITH THE "STORMTECH SC-310/SC-740/DC-780 CONSTRUCTION GUIDE".
3. CHAMBERS ARE NOT TO BE BACKFILLED WITH A DOZER OR AN EXCAVATOR SITUATED OVER THE CHAMBERS. STORMTECH RECOMMENDS 3 BACKFILL METHODS:
   - STONESHOOTER LOCATED OFF THE CHAMBER BED.
   - BACKFILL AS ROWS ARE BUILT USING AN EXCAVATOR ON THE FOUNDATION STONE OR SUBGRADE.
   - BACKFILL FROM OUTSIDE THE EXCAVATION USING A LONG BOOM HOE OR EXCAVATOR.
4. THE FOUNDATION STONE SHALL BE LEVELED AND COMPACTED PRIOR TO PLACING CHAMBERS.
5. JOINTS BETWEEN CHAMBERS SHALL BE PROPERLY SEATED PRIOR TO PLACING STONE.
6. MAINTAIN MINIMUM - 6" SPACING BETWEEN THE CHAMBER ROWS.
7. EMBEDMENT STONE SURROUNDING CHAMBERS MUST BE A CLEAN, CRUSHED, ANGULAR STONE 3/4-2".
8. THE CONTRACTOR MUST REPORT ANY DISCREPANCIES WITH CHAMBER FOUNDATION MATERIALS BEARING CAPACITIES TO THE SITE DESIGN ENGINEER.
9. ADS RECOMMENDS THE USE OF "FLEXSTORM CATCH IT" INSERTS DURING CONSTRUCTION FOR ALL INLETS TO PROTECT THE SUBSURFACE STORMWATER MANAGEMENT SYSTEM FROM CONSTRUCTION SITE RUNOFF.
10. STORMTECH SC-740 CHAMBERS SHALL BE INSTALLED IN ACCORDANCE WITH THE "STORMTECH SC-310/SC-740/DC-780 CONSTRUCTION GUIDE".
11. THE USE OF CONSTRUCTION EQUIPMENT OVER SC-740 CHAMBERS IS LIMITED:
    - NO EQUIPMENT IS ALLOWED ON BARE CHAMBERS.
    - NO RUBBER TIRED LOADERS, DUMP TRUCKS, OR EXCAVATORS ARE ALLOWED UNTIL PROPER FILL DEPTHS ARE REACHED IN ACCORDANCE WITH THE "STORMTECH SC-740 CONSTRUCTION GUIDE".
    - WEIGHT LIMITS FOR CONSTRUCTION EQUIPMENT CAN BE FOUND IN THE "STORMTECH SC-310/SC-740/DC-780 CONSTRUCTION GUIDE".
12. FULL 36" (900 mm) OF STABILIZED COVER MATERIALS OVER THE CHAMBERS IS REQUIRED FOR DUMP TRUCK TRAVEL OR DUMPING.
13. **USE OF A DOZER TO PUSH EMBEDMENT STONE BETWEEN THE ROWS OF CHAMBERS MAY CAUSE DAMAGE TO THE CHAMBERS AND IS NOT AN ACCEPTABLE BACKFILL METHOD. ANY CHAMBERS DAMAGED BY THE "DUMP AND PUSH" METHOD ARE NOT COVERED UNDER THE STORMTECH STANDARD WARRANTY.**

SILT FENCE DETAIL A
NOT TO SCALE

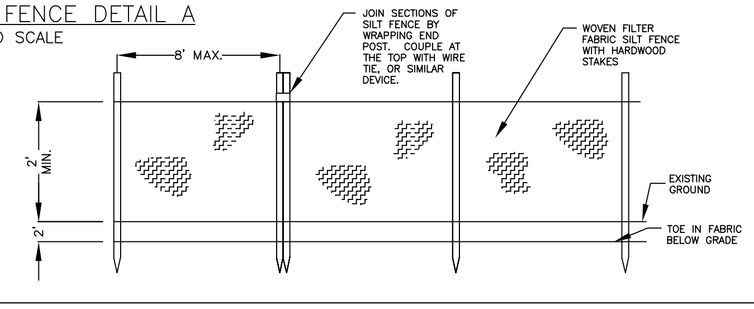

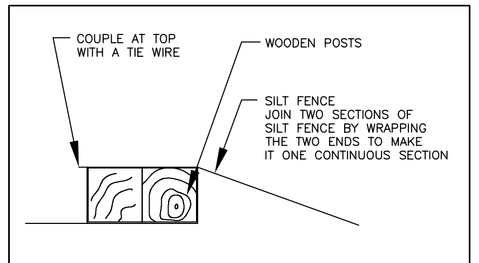

SILT FENCE DETAIL B
NOT TO SCALE

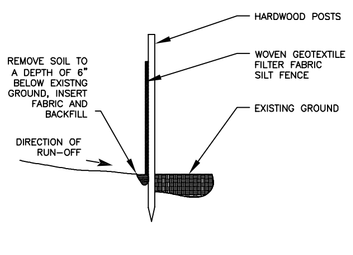

SILT FENCE DETAIL C
NOT TO SCALE

TRINITY ENGINEERING
TECHNICAL SERVICES, LLC
751 MAIN ROAD
STAMFORD, VT 05352
(802) 694-1919
34 HAYDEN ROWE ST. SUITE 154
HOPKINTON, MA 01748
(508) 589-7086

COPYRIGHT © TRINITY – ALL RIGHTS RESERVED.
ALL MATERIAL CONTAINED WITHIN IS PROPERTY OF TRINITY, AND MUST NOT BE REPRODUCED WITHOUT WRITTEN PERMISSION.

REV. NO.	DATE	DESCRIPTION	BY
2	4/14/20	ADDRESS VTDEC COMMENTS	J.E.D.
1	3/30/20	STORMWATER DETAILS	

STATE OF VERMONT CIVIL JOHN E. DUPRAS No. 7378 LICENSED PROFESSIONAL ENGINEER

DESIGNED BY: J.E.D.
DRAWN BY: G.J.V.
CHECKED BY: J.E.D.
SCALE: AS SHOWN

TITLE: STORMWATER DETAILS

PROJECT: PREPARED FOR COLD BROOK CROSSINGC HOA, LOTS 1-5 WILMINGTON, VERMONT

DATE: 4/14/2020

PROJECT NUMBER: 19156

SHEET NUMBER: C-5

SHEET: 5 OF 8

NOTES:

1) THE EXISTING TOPSOIL DEPTH, IN AREAS WHERE THE POST CONSTRUCTION SOIL STANDARD APPLIES, WAS FOUND TO MEET THE STANDARD, WITH THE EXCEPTION OF THOSE AREAS IDENTIFIED ON THE PLAN AS HAVING SUBSTANDARD TOPSOIL DEPTH.
2) AREAS HAVING SUBSTANDARD TOPSOIL DEPTH REQUIRE ADDITIONAL TOPSOIL AND CONFIRMATORY HAND BORINGS AFTER PLACEMENT, AND MUST FOLLOW THE POST CONSTRUCTION SOIL STANDARDS DESCRIBED BELOW.
3) ALL AREA OF NEW DISTURBANCE REQUIRED TO CONSTRUCT THE PROPOSED FEATURES MUST ALSO MEET THE POST CONSTRUCTION SOIL STANDARD AS DESCRIBED BELOW.

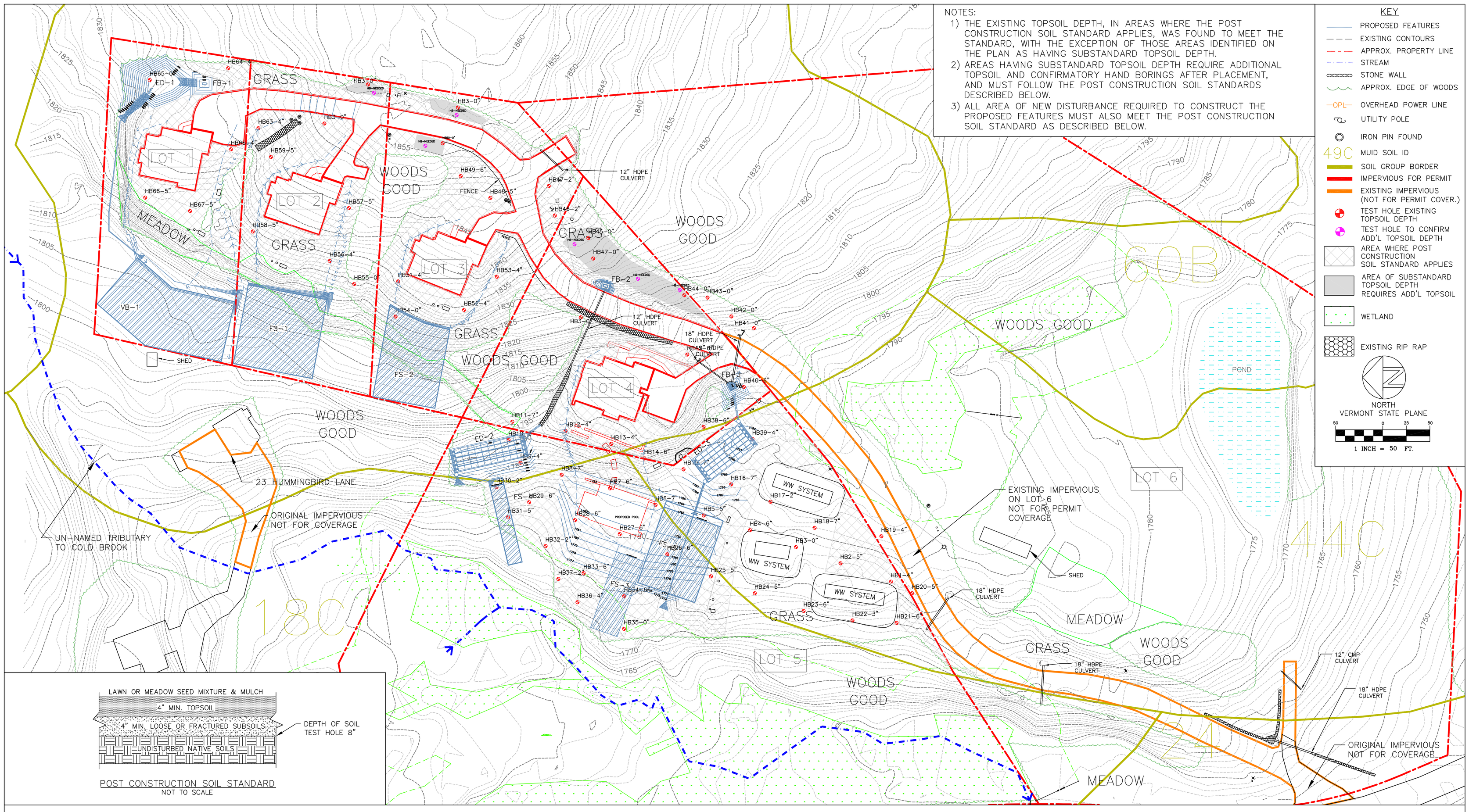

POST CONSTRUCTION SOIL STANDARD
NOT TO SCALE

SOIL RESTORATION NOTES:

1) FOLLOWING ROUGH SITE GRADING, INSTALLATION OF UTILITIES AND INFRASTRUCTURE; AND PRIOR TO PLANTING OF VEGETATED COVER, CONTRACTOR SHALL RESTORE SOIL QUALITY OF THE DISTURBED SOILS THAT WILL NOT BE COVERED BY IMPERVIOUS SURFACES, INCORPORATED INTO STRUCTURAL STORMWATER TREATMENT PRACTICES OR ENGINEERED STRUCTURAL FILL USING ONE OF THE FOLLOWING METHODS. CONTRACTOR SHALL PROVIDE NOTICE TO THE ENGINEER AND OWNER PRIOR TO CONSTRUCTION ON THE METHOD SELECTED.

OPTION 1: LEAVE UNDISTURBED AND PROTECTED FROM COMPACTION:

A) IDENTIFY AREAS THAT WILL NOT BE STRIPPED, LOGGED, GRADED OR DRIVEN ON AND FENCE OFF THOSE AREAS TO PREVENT CONSTRUCTION IMPACTS.
B) FAILURE TO FOLLOW OPTION 1A, WILL RESULT IN THE NECESSITY OF THE CONTRACTOR TO FOLLOW OPTION 2, 3, OR 4 ON ALL DISTURBED AREAS.

OPTION 2: AMEND EXISTING SITE TOPSOIL OR SUBSOIL IN PLACE:

A) SCARIFY OR TILL SUBSOILS TO 4 INCH DEPTH OR TO DEPTH NEEDED TO ACHIEVE A TOTAL DEPTH OF 8 INCHES OF UNCOMPACTED SOIL AFTER CALCULATED AMOUNT OF AMENDMENT IS ADDED. EXCEPT FOR WITHIN THE DRIP LINE OF EXISTING TREES, THE ENTIRE SURFACE SHALL BE DISTURBED BY SCARIFICATION.
B) AMEND SOIL TO MEET ORGANIC CONTENT REQUIREMENTS:

PRE APPROVED RATE: PLACE 1 INCH OF COMPOSTED MATERIAL WITH AN ORGANIC MATTER CONTENT BETWEEN 40% AND 65% AND ROTOTILL INTO 3 INCHES OF SOIL OR,

CALCULATED RATE: PLACE CALCULATED AMOUNT OF COMPOSTED MATERIAL OR APPROVED ORGANIC MATERIAL AND ROTOTILL INTO DEPTH OF SOIL NEEDED TO ACHIEVE 4 INCHES OF SETTLED SOIL AT 4% ORGANIC CONTENT. RAKE BEDS TO SMOOTH AND REMOVE SURFACE ROCKS LARGER THAN 2 INCHES IN DIAMETER. WATER OR ROLL TO COMPACT SOIL IN TURF AREAS TO 85% OF MAXIMUM DRY DENSITY.

OPTION 3: REMOVE AND STOCKPILE EXISTING TOPSOIL DURING GRADING:

A) STOCKPILE SOIL ON SITE IN A DESIGNATED CONTROLLED AREA, AT LEAST 50 FEET FROM SURFACE WATERS, WETLANDS, FLOODPLAINS OR OTHER CRITICAL RESOURCE AREAS.
B) SCARIFY OR TILL THE SUBGRADE TO A DEPTH OF 4 INCHES. EXCEPT FOR WITHIN THE DRIP LINE OF EXISTING TREES, THE ENTIRE SURFACE SHALL BE DISTURBED BY SCARIFICATION.
C) STOCKPILED TOPSOIL SHALL ALSO BE AMENDED, IF NEEDED, TO MEET THE ORGANIC CONTENT REQUIREMENTS:

PRE APPROVED RATE: COMPOST SHALL BE INCORPORATED WITH AN ORGANIC MATTER CONTENT BETWEEN 40% AND 65% INTO THE TOPSOIL AT A RATIO OF 1:3, OR

CALCULATED RATE: INCORPORATE COMPOSTED MATERIAL OR APPROVED ORGANIC MATERIAL AT A CALCULATED RATE TO ACHIEVE 4 INCHES OF SETTLED SOIL AT 4% ORGANIC CONTENT.

D) REPLACE STOCKPILED TOPSOIL PRIOR TO PLANTING.
E) RAKE TO LEVEL, AND REMOVE SURFACE STONES LARGER THAN 2 INCHES IN DIAMETER.

OPTION 4: IMPORT TOPSOIL MIX, OR OTHER MATERIALS FOR MIXING, INCLUDING COMPOST, OF SUFFICIENT ORGANIC CONTENT AND DEPTH.

A) SCARIFY OR TILL SUBGRADE TO A DEPTH OF 4 INCHES. EXCEPT FOR WITHIN THE DRIP LINE OF EXISTING TREES, THE ENTIRE SURFACE SHALL BE DISTURBED BY SCARIFICATION.
B) PLACE 4 INCHES OF IMPORTED TOPSOIL MIX ON SURFACE. THE IMPORTED TOPSOIL MIX SHALL CONTAIN 4% ORGANIC MATTER. SOILS USED IN THE MIX SHALL BE SAND OR SANDY LOAM AS DEFINED BY THE USDA SOIL CLASSIFICATION SYSTEM.
C) RAKE BEDS TO SMOOTH AND REMOVE SURFACE STONES LARGER THAN 2 INCHES IN DIAMETER.
D) WATER OR ROLL TO COMPACT SOIL IN TURF AREAS TO 85% OF MAXIMUM DRY DENSITY.

2) ONCE SOIL QUALITY HAS BEEN RESTORED IN ACCORDANCE WITH THE PRACTICES OUTLINED ABOVE, AND PRIOR TO PLANTING THE ENGINEER SHALL PERFORM FIELD TESTING OF RESTORED SOIL QUALITY. TESTING SHALL BE IN THE LOCATIONS SHOWN ON THE PLAN AND AS DETERMINED IN THE FIELD BY THE ENGINEER. TESTING SHALL CONSIST OF A MINIMUM OF 9 HOLES PER ACRE. TESTING SHALL BE PERFORMED USING A SPADE SHOVEL DRIVEN TO A DEPTH OF 8 INCHES USING SOLELY THE WEIGHT OF THE INSPECTOR.
3) TESTS THAT INDICATE DIFFICULTY IN DRIVING THE SPADE, LACK OF SOIL AMENDMENTS AND TEXTURES NOT CONSISTENT WITH RESTORATION PRACTICE OPTIONS NOTED ABOVE SHALL HAVE AN ADDITIONAL TEST PERFORMED WITHIN 50 FEET OF TEST NOT MEETING THE RESTORATION OPTIONS ABOVE. IF THREE CONSECUTIVE TESTS SHOWING POOR RESULTS ARE OBTAINED THE AREA TESTED SHALL BE SUBJECT TO REWORK IN ACCORDANCE WITH RESTORATION PRACTICES NOTED ABOVE AND SUBSEQUENTLY RETESTED BY THE ENGINEER.
4) ON COMPLETION OF SUCCESSFUL TESTING, SURFACES SHALL BE PLANTED WITH SEED AND STABILIZED IN ACCORDANCE WITH THE DETAILS IN THESE PLANS.

TRINITY ENGINEERING
TECHNICAL SERVICES, LLC
751 MAIN ROAD
STAMFORD, VT 05352
(802) 694-1919
34 HAYDEN ROWE ST. SUITE 154
HOPKINTON, MA 01748
(508) 589-7086

COPYRIGHT © TRINITY – ALL RIGHTS RESERVED.
ALL MATERIAL CONTAINED WITHIN IS PROPERTY OF TRINITY AND NOT TO BE REPRODUCED WITHOUT WRITTEN PERMISSION.

REV. NO.	DATE	DESCRIPTION	BY
2	4/14/20	SOIL MANAGEMENT PLAN	J.E.D.
1	3/30/20	SOIL MANAGEMENT PLAN	

STATE OF VERMONT CIVIL JOHN E. DUPRAS No. 7378 LICENSED PROFESSIONAL ENGINEER

DESIGNED BY: J.E.D.
DRAWN BY: G.J.V.
CHECKED BY: J.E.D.
SCALE: AS SHOWN

TITLE: PROPOSED SOIL MANAGEMENT PLAN

PROJECT: PREPARED FOR COLD BROOK CROSSINGG HOA, LOTS 1-5 WILMINGTON, VERMONT

DATE: 4/14/2020

PROJECT NUMBER: 19156

SHEET NUMBER: C-6

SHEET: 6 OF 8

NOTES:
1) EXISTING CONDITIONS ARE AS OF DECEMBER 2019.
2) EXISTING IMPERVIOUS ON LOT 6 IS NOT FOR PERMIT COVERAGE.
3) EXISTING IMPERVIOUS OUTSIDE OF LOTS 1–5 IS INCLUDED IN CALCULATIONS FOR RUN–OFF RATES AND VOLUMES.

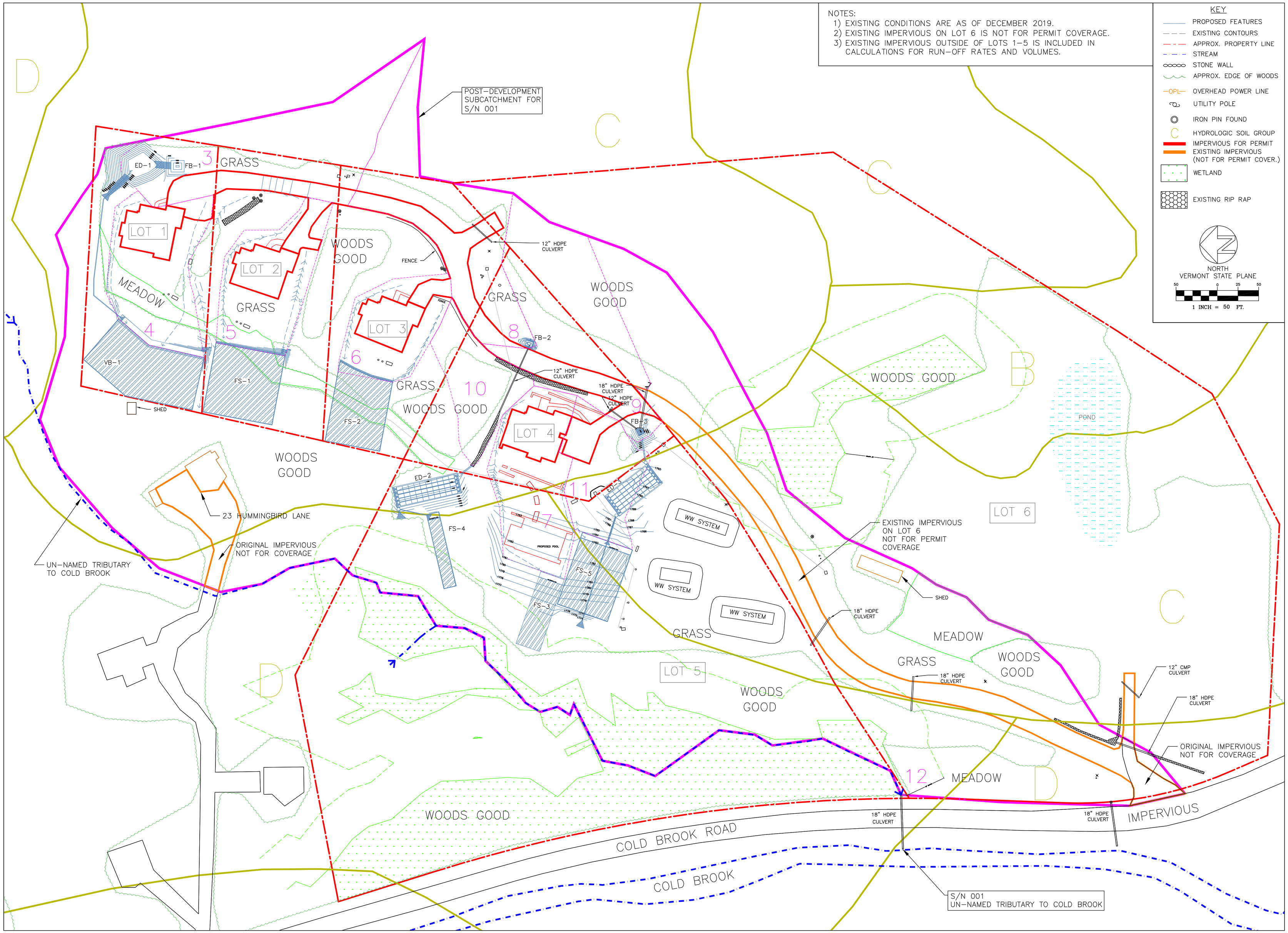

TRINITY ENGINEERING
TECHNICAL SERVICES, LLC
751 MAIN ROAD
STAMFORD, VT 05352
(802) 694–1919
34 HAYDEN ROWE ST., SUITE 154
HOPKINTON, MA 01748
(508) 589–7086

COPYRIGHT © TRINITY – ALL RIGHTS RESERVED.
ALL MATERIAL CONTAINED WITHIN IS PROPERTY OF TRINITY AND NOT TO BE REPRODUCED WITHOUT WRITTEN PERMISSION.

REV. NO.	DATE	DESCRIPTION	BY
2	4/14/20	ADDRESS VTDEC COMMENTS	J.E.D.
1	3/30/20	ORIGINAL SUBMISSION	

STATE OF VERMONT
CIVIL
JOHN E. DUPRAS
No. 7378
LICENSED
PROFESSIONAL ENGINEER

DESIGNED BY: J.E.D.
DRAWN BY: G.J.V.
CHECKED BY: J.E.D.
SCALE: AS SHOWN

TITLE: STORMWATER MANAGEMENT PLAN

PROJECT: PREPARED FOR COLD BROOK CROSSINGC HOA, LOTS 1-5 WILMINGTON, VERMONT

DATE: 4/14/2020

PROJECT NUMBER: 19156

SHEET NUMBER: C-7

SHEET: 7 OF 8

NOTES:
1) EXISTING CONDITIONS ARE AS OF DECEMBER 2019.
2) EXISTING IMPERVIOUS ON LOT 6 IS NOT FOR PERMIT COVERAGE.
3) EXISTING IMPERVIOUS OUTSIDE OF LOTS 1–5 IS INCLUDED IN CALCULATIONS FOR RUN–OFF RATES AND VOLUMES.

KEY
- PROPOSED FEATURES
- EXISTING CONTOURS
- APPROX. PROPERTY LINE
- STREAM
- STONE WALL
- APPROX. EDGE OF WOODS
- OPL — OVERHEAD POWER LINE
- UTILITY POLE
- IRON PIN FOUND
- HYDROLOGIC SOIL GROUP
- IMPERVIOUS FOR PERMIT
- EXISTING IMPERVIOUS (NOT FOR PERMIT COVER.)
- WETLAND
- EXISTING RIP RAP

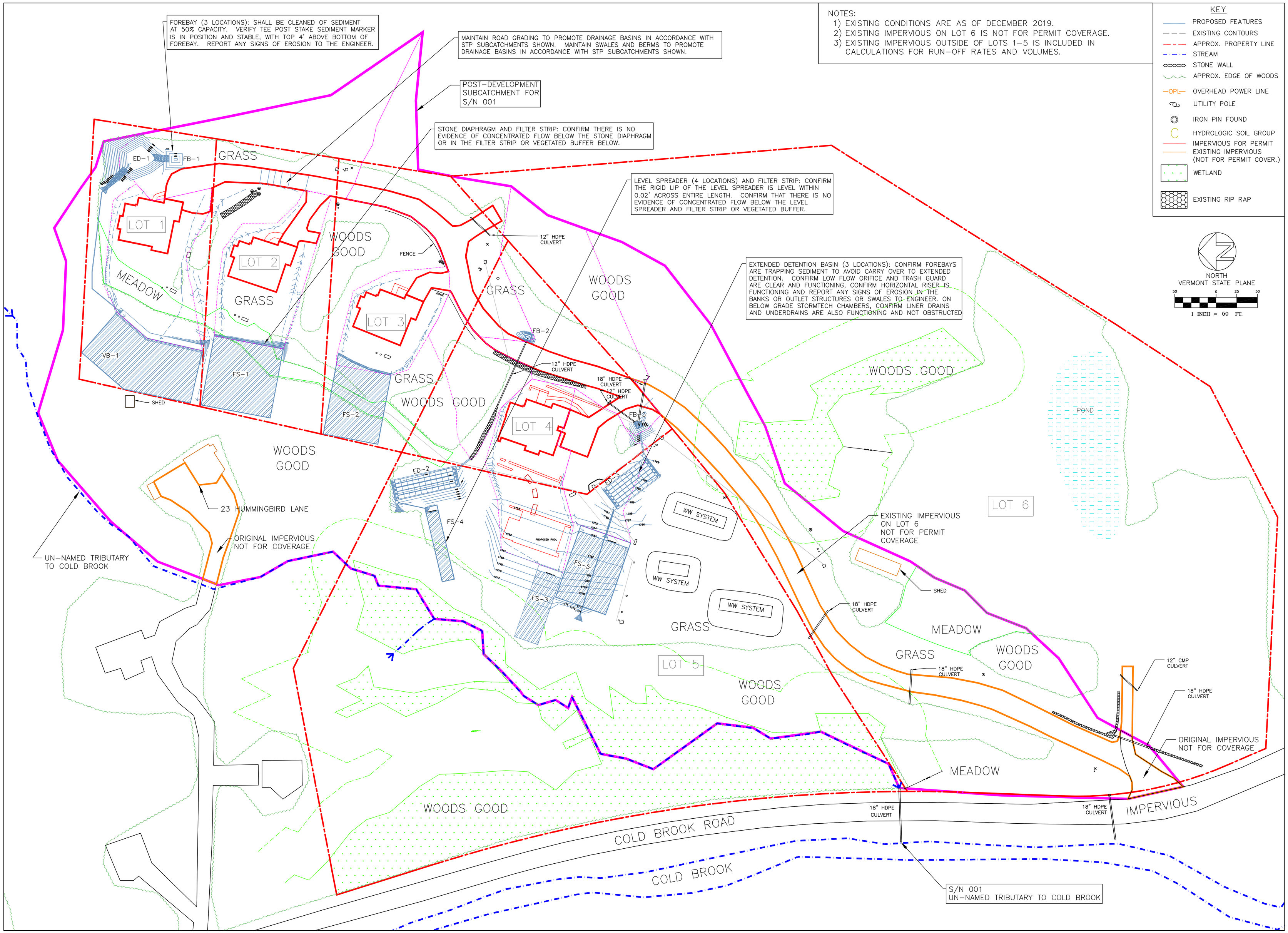

TRINITY ENGINEERING
TECHNICAL SERVICES, LLC
751 MAIN ROAD
STAMFORD, VT 05352
(802) 694–1919
34 HAYDEN ROWE ST., SUITE 154
HOPKINTON, MA 01748
(508) 589–7086

COPYRIGHT © TRINITY – ALL RIGHTS RESERVED.
ALL MATERIAL CONTAINED WITHIN IS PROPERTY OF TRINITY AND NOT TO BE REPRODUCED WITHOUT WRITTEN PERMISSION.

REV. NO.	DATE	DESCRIPTION	BY
2	4/14/20	ADDRESS VTDEC COMMENTS	J.E.D.
1	3/30/20	ANNOTATED SITE PLAN	

STATE OF VERMONT CIVIL JOHN E. DUPRAS No. 7378 LICENSED PROFESSIONAL ENGINEER

DESIGNED BY: J.E.D.
DRAWN BY: G.J.V.
CHECKED BY: J.E.D.
SCALE: AS SHOWN

TITLE: ANNOTATED SITE PLAN

PROJECT: PREPARED FOR COLD BROOK CROSSINGC HOA, LOTS 1-5 WILMINGTON, VERMONT

DATE: 4/14/2020

PROJECT NUMBER: 19156

SHEET NUMBER: C-8

SHEET: 8 OF 8